REVOLUTION DEEP DRAFT SPA GRAPH

MINIMUM SETBACK = 14"
MAXIMUM SETBACK = 44"

DRAW YOUR PROFILE ON THE GRAPH USING THE CENTER OF THE ANCHOR AS YOUR START POINT. ALL GRAPH LINES ARE IN 1" INCREMENTS.

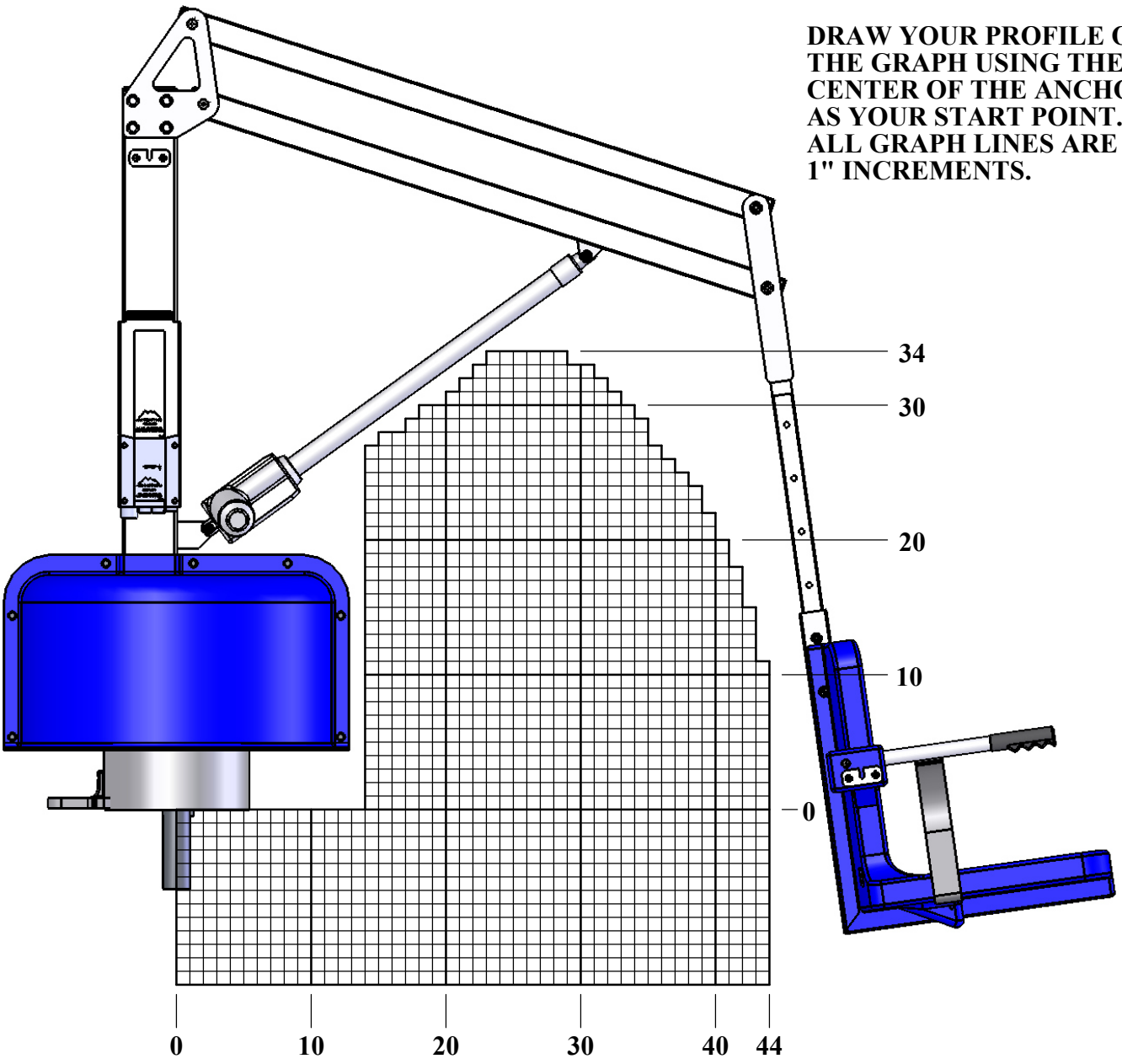

SEAT ATTACHED AT LOWEST POSITION

Aqua Creek Products®

9889 GARRYMORE LANE
MISSOULA, MT 59808
(406) 549-0769
FAX (406) 549-2602

PRODUCT: REVOLUTION DEEP DRAFT SPA	
PART #: F-702RLSDD	
SCALE: 1:12	DATE: 12/23/2016
DRAWN BY: KR	REVISION: A

REVOLUTION DEEP DRAFT SPA GRAPH

MINIMUM SETBACK = 14"
MAXIMUM SETBACK = 41"

DRAW YOUR PROFILE ON THE GRAPH USING THE CENTER OF THE ANCHOR AS YOUR START POINT. ALL GRAPH LINES ARE IN 1" INCREMENTS.

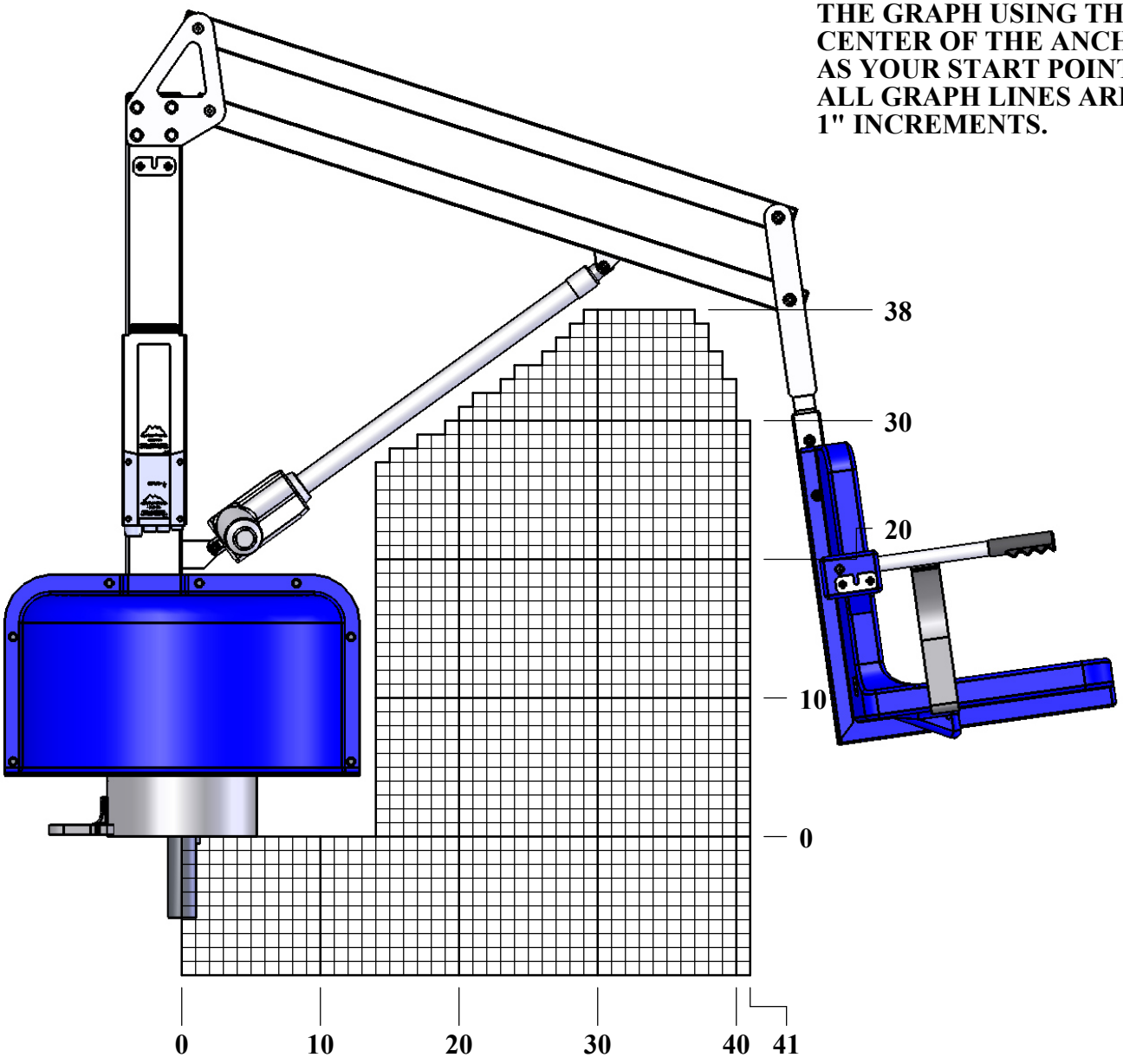

SEAT ATTACHED AT HIGHEST POSITION

Aqua Creek Products®

9889 GARRYMORE LANE
MISSOULA, MT 59808
(406) 549-0769
FAX (406) 549-2602

PRODUCT: REVOLUTION DEEP DRAFT SPA	
PART #: F-702RLSDD	
SCALE: 1:12	DATE: 12/23/2016
DRAWN BY: KR	REVISION: A