REVOLUTION DEEP DRAFT SPA POOL LIFT

U.S. PATENT NO. D507,769 S

PRODUCT WEIGHT: 275lbs [124kg]
MAX WEIGHT CAPACITY: 400lbs [181kg]
MIN ANCHOR SETBACK: 14"
MAX WALL HEIGHT: 38"
WALL THICKNESS AT MAX HEIGHT: 8"
MAX WALL THICKNESS: 30"
WALL HEIGHT AT MAX THICKNESS: 11"
SEAT HEIGHT ADJUSTMENT: 16" IN 4" INCREMENTS
ADA COMPLIANCE: THIRD PARTY VERIFIED BY WYLE LABS
VERTICAL TRAVEL DISTANCE: 49 1/2"

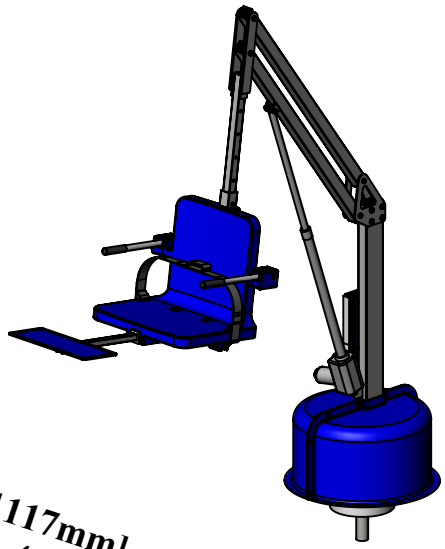

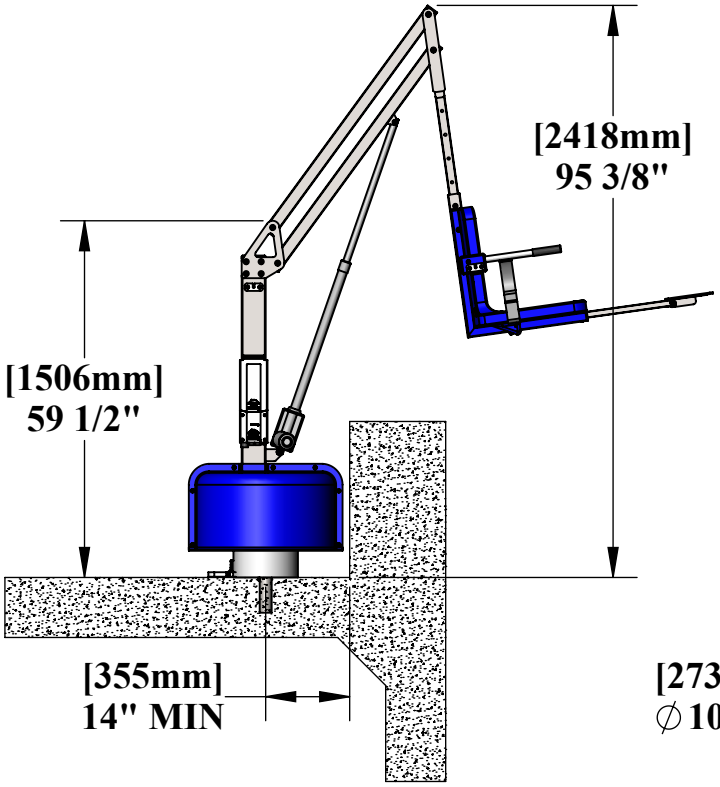

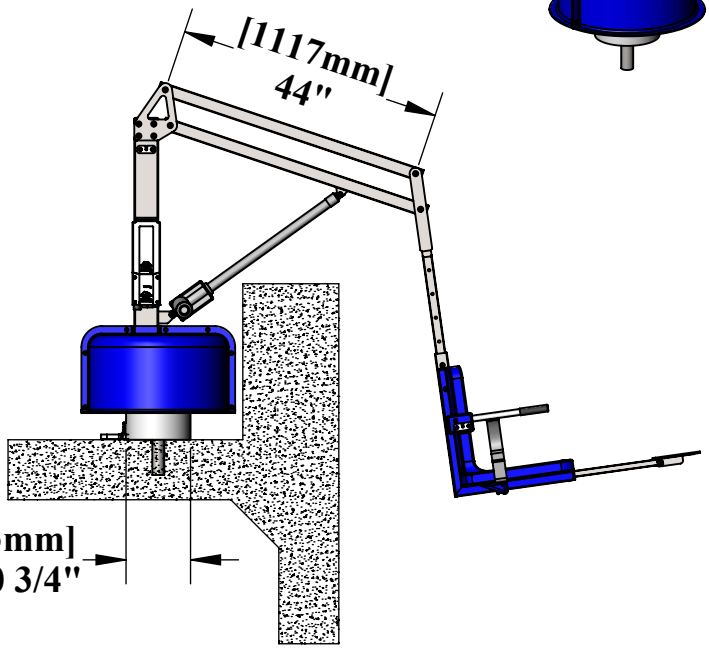

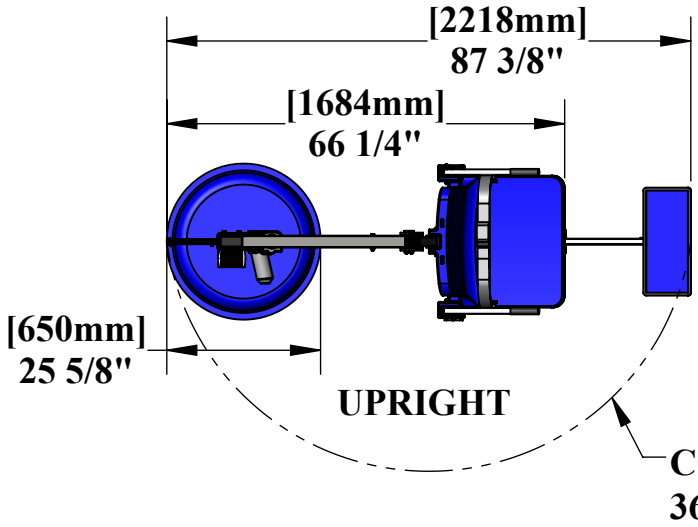

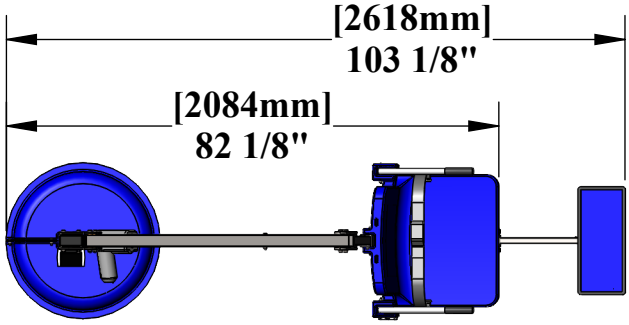

CE UL CERTIFIED

Aqua Creek Products®

9889 GARRYMORE LANE
MISSOULA, MT 59808
(406) 549-0769
FAX (406) 549-2602

NOTE:
*SPECIFICATIONS ARE SUBJECT TO CHANGE WITHOUT NOTICE

PRODUCT: REVOLUTION DEEP DRAFT SPA	
PART #: F-702RLSDD	
SCALE: 1:32	DATE: 11/30/2018
DRAWN BY: KR	REVISION: A