Uncontrolled Copy

REV	ECO	REV BY	DATE	APPD	DATE
F	0030014	B.ZHAO	01-06-2013	B.SHEN	01-06-2013

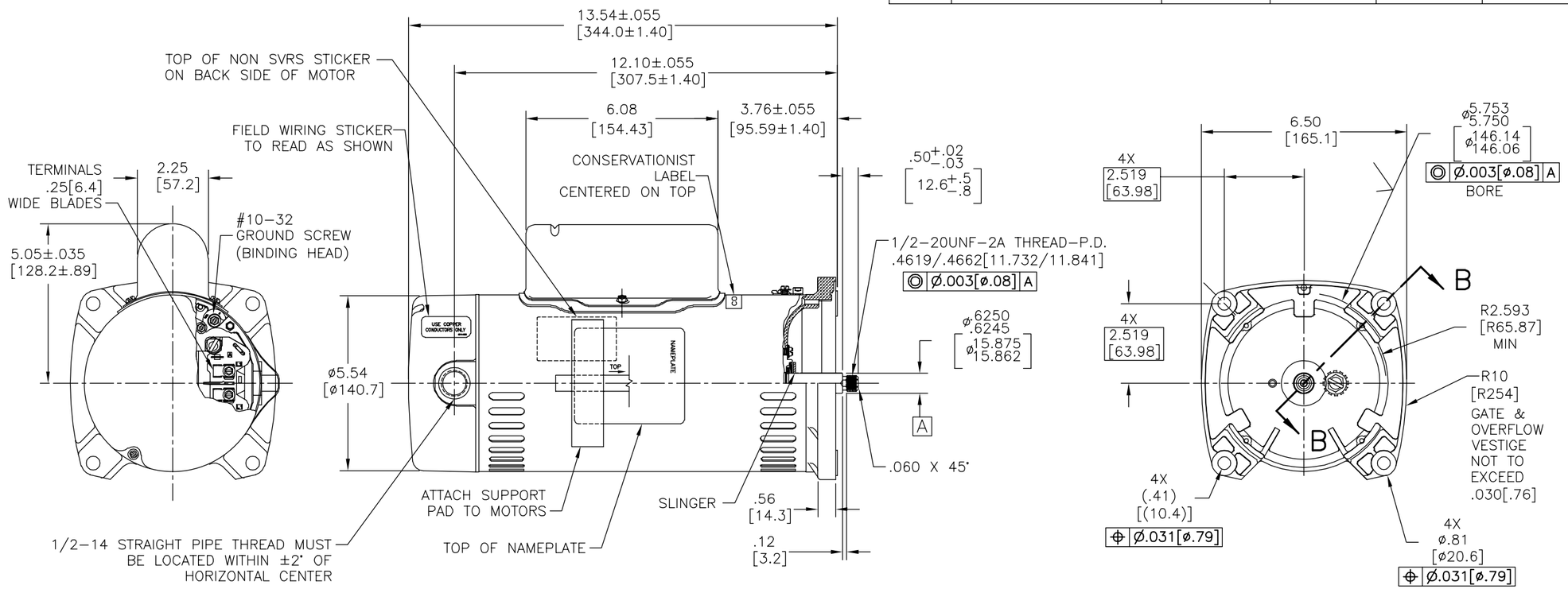

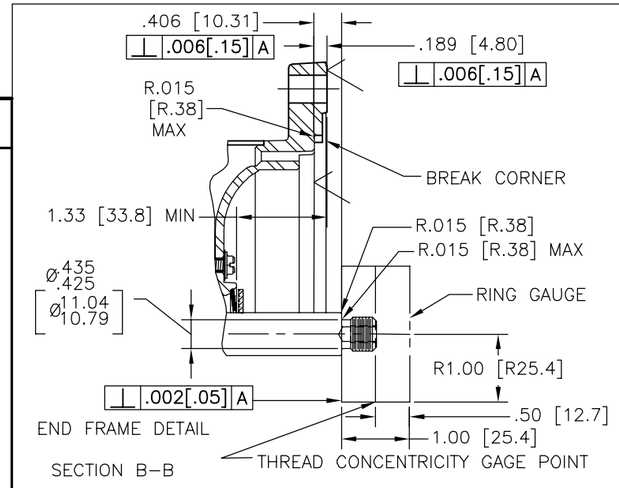

NAMEPLATE DATA

MODEL: K48M2P105B2
CUST PN: SQS1152R
HP: 1.5/.19 SF: 1.47
ROT: CCWPE
RPM: 3450/1725
TYPE: F/C CODE: K
FORM: FRAME: 48Y
VOLTS: 230
AMPS:
MAX AMPS: 10.0/3.0
SF AMPS:
PH: 1 HZ: 60
INS: B AMB: 50°C
DUTY: CONT
ENCLOSURE: ODP
THERMALLY PROTECTED

EXTERNAL CONNECTION DIAGRAM

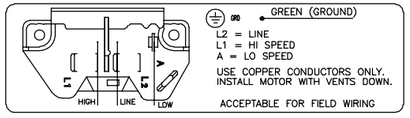

NOTES

1. FINISH TO BE SATIN BLACK.
2. .44[11.2] WRENCH FLATS ON SHAFT-FOR ACCESS TO THIS WRENCH FLAT REMOVE END COVER.
3. 303 STAINLESS STEEL SHAFT.
4. LIMITS ON AMPLITUDE OF VIBRATION MEASURED AT BEARING HOUSING=.001[.03]
5. CAPACITOR HOUSING TO BE LOCATED WITHIN ±2.5" OF VERTICAL ℄ OF END FRAM (P.E.).

PERFORMANCE CURVE		APPROVED SAMPLE	
K48M2W15			
UL COMPONENT		CSA	
FILE#	CCN#	FILE#	GUIDE#
E46412	PRGYZ	LR3341	4211-01
CUSTOMER	DISTRIBUTION SERVICES		

GEOMETRIC CHARACTERISTICS & SYMBOLS
- FLATNESS
- STRAIGHTNESS
- ANGULARITY
- PERPENDICULARITY (SQUARENESS)
- PARALLELISM
- ROUNDNESS (CIRCULARITY)
- CYLINDRICITY
- PROFILE OF ANY SURFACE
- PROFILE OF ANY LINE
- RUNOUT
- TRUE POSITION
- CONCENTRICITY
- SYMMETRY

ASME Y14.5M 1994

UNLESS OTHERWISE SPECIFIED
DIM. TOLERANCES ARE AS FOLLOWS:

	X	XX	XXX	XXXX
INCH	±.1	±.02	±.005	±.0005
mm	±0.5	±0.13	±0.013	

ANG. ±.50 DEG
REMOVE BURRS & BREAK SHARP EDGES:
INCH .003-.015 mm 0.1-0.4
CORNER FILLETS TO:
INCH .020 mm 0.5
MACHINE SURFACES:
INCH 125 mm 3.2
METRIC DIMS. SHOWN IN [BRACKETS]

DR BY: JAH	5-25-04	
APPD: DRF	1-21-05	
THIRD ANGLE PROJECTION	EDS DATE 11-11-2011	FORMAT REV H

CONFIDENTIAL: THIS DRAWING AND ITS INFORMATION ARE THE EXCLUSIVE AND CONFIDENTIAL PROPERTY OF REGAL-BELOIT CORPORATION AND ARE NOT TO BE DISCLOSED, DUPLICATED, DISTRIBUTED OR OTHERWISE USED WITHOUT THE WRITTEN CONSENT OF REGAL-BELOIT CORPORATION. -ALL RIGHTS RESERVED.

REGAL **REGAL-BELOIT CORPORATION**

DESCRIPTION: MODEL-PFHP-48FR OUTLINE

SIZE: C | DWG NO: SQS1152R

SCALE: NONE | SHEET 1

Uncontrolled Copy

REVISION:	ECO	REVISADO POR:	FECHA:	APROBADO POR:	FECHA:
F	0030014	B.ZHAO	01-06-2013	B.SHEN	01-06-2013

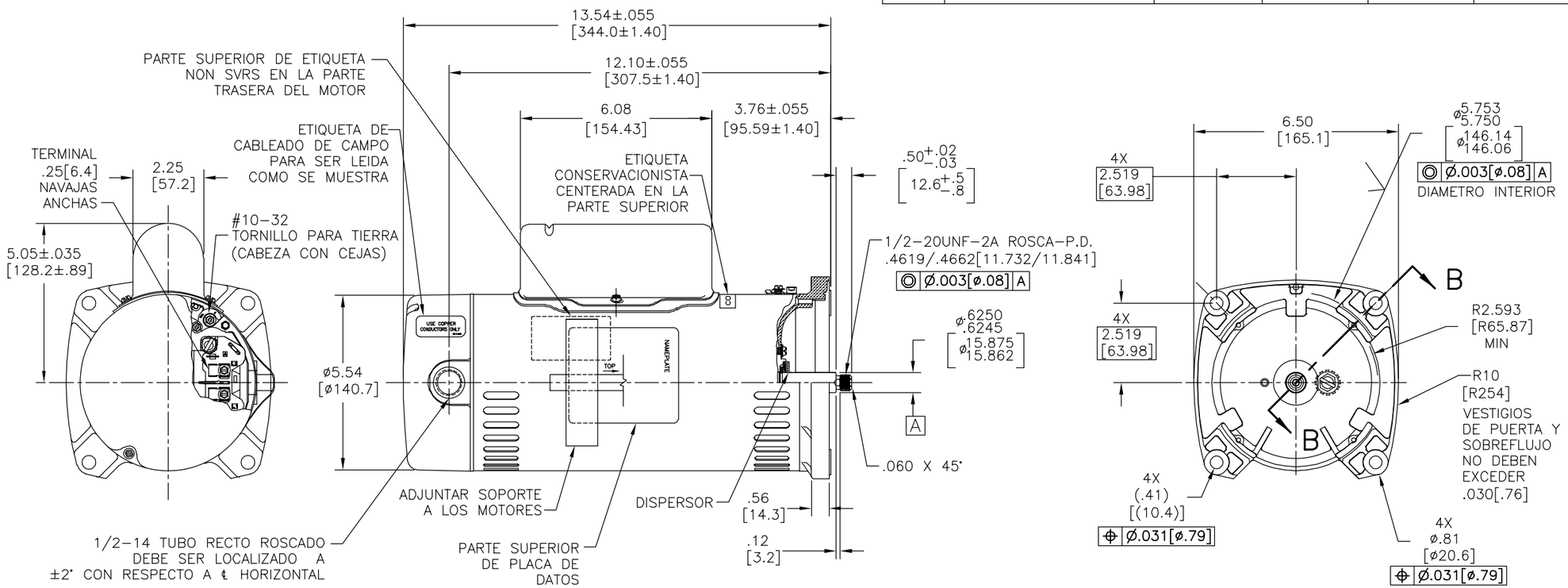

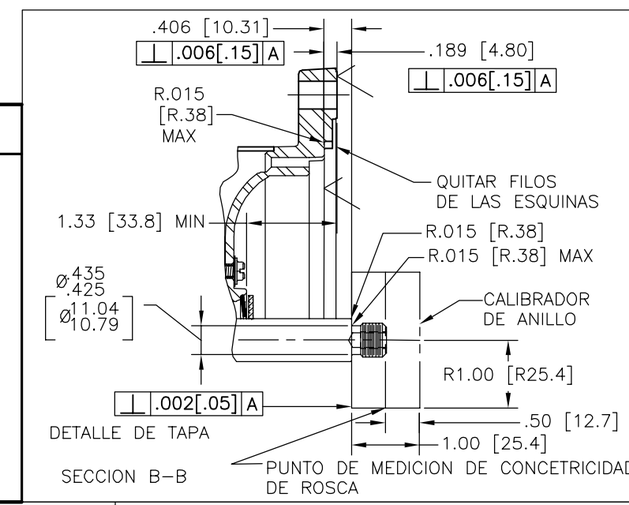

NAMEPLATE DATA

MODEL: K48M2P105B2
CUST PN: SQS1152R
HP: 1.5/.19 SF: 1.47
ROT: CCWPE
RPM: 3450/1725
TYPE: F/C CODE: K
FORM: FRAME: 48Y
VOLTS: 230
AMPS:
MAX AMPS: 10.0/3.0
SF AMPS:
PH: 1 HZ: 60
INS: B AMB: 50°C
DUTY: CONT
ENCLOSURE: ODP
THERMALLY PROTECTED

EXTERNAL CONNECTION DIAGRAM

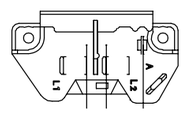

NOTES

1. EL ACABADO DE LA PINTURA SERA NEGRO SATINADO.
2. LLAVE PLANA DE .44[11.2] EN FLECHA – PARA ACCESO A ESTA LLAVE PLANA REMOVER CUBIERTA.
3. EXTENSION DE FLECHA DE ACERO INOXIDABLE.
4. MEDIDA DE LOS LIMITES DE AMPLITUD DE VIBRACION EN LA CAVIDAD DEL BALERO=.001[.03].
5. CUBIERTA DEL CAPACITOR SERA UBICADO ENTRE ±2.5° DE LA LINEA VERTICAL ℄ DE LA TAPA (LADO DE BOMBA).

PERFORMANCE CURVE		APPROVED SAMPLE	
K48M2W15			
UL COMPONENT		CSA	
FILE#	CCN#	FILE#	GUIDE#
E46412	PRGYZ	LR3341	4211-01
CUSTOMER	DISTRIBUTION SERVICES		

CARACTERISTICAS DE GEOMETRIA Y SIMBOLOS
- ▱ PLANICIDAD
- — RECTITUD
- ∠ ANGULARIDAD
- ⊥ PERPENDICULARIDAD (A ESCUADRA)
- // PARALELISMO
- ○ REDONDEZ (CIRCULARIDAD)
- ⌭ CILINDRICIDAD
- ⌓ PERFIL DE CUALQUIER SUPERFICIE
- ⌒ PERFIL DE CUALQUIER LINEA
- ↗ VARIACION
- ⌖ POSICION REAL
- ◎ CONCENTRICIDAD
- ⌯ SIMETRIA

ASME Y14.5M 1994

A MENOS QUE SE ESPECIFIQUE DE OTRA MANERA, LAS TOLERANCIAS DE LAS DIMS; SON LAS SIGUIENTES:

	X	XX	XXX	XXXX
PULG	±.1	±.02	±.005	±.0005
mm	±0.5	±0.13	±0.013	

ANG. ±.50 GRADOS
ELIMINAR REBABAS Y ORILLAS FILOSAS DEL BORDE.
PULG .003–.015 mm 0.1–0.4
FILETEAR ESQUINA: PULG .020 mm 0.5
MAQUINAR SUPERFICIES
PULG 125 mm 3.2
DIMS METRICAS MOSTRADAS [PARENTESIS]

DIBUJADO POR: JAH	5-25-04	
APROBADO POR: DRF	1-21-05	
TERCER ANGULO DE PROYECCION	FECHA EDS: 11-11-2011	REV. FORMATO: H

CONFIDENCIAL: ESTE DIBUJO Y SU INFORMACION SON PROPIEDAD DE USO EXCLUSIVO Y CONFIDENCIAL DE REGAL-BELOIT CORPORATION. Y NO DEBERAN SER REVELADOS, DUPLICADOS, DISTRIBUIDOS O USARSE DE OTRA MANERA SIN EL CONSENTIMIENTO ESCRITO DE REGAL-BELOIT CORPORATION. -TODOS LOS DERECHOS RESERVADOS.

REGAL **REGAL-BELOIT CORPORATION**

DESCRIPCION: MODEL-PFHP-48FR OUTLINE

TAMAÑO: C | NUMERO DE DIBUJO: SQS1152R

ESCALA: NONE | HOJA: 1