Installation Instructions

Funbrella® Classic & Funbrella® Shark

12’ & 20’ Diameters

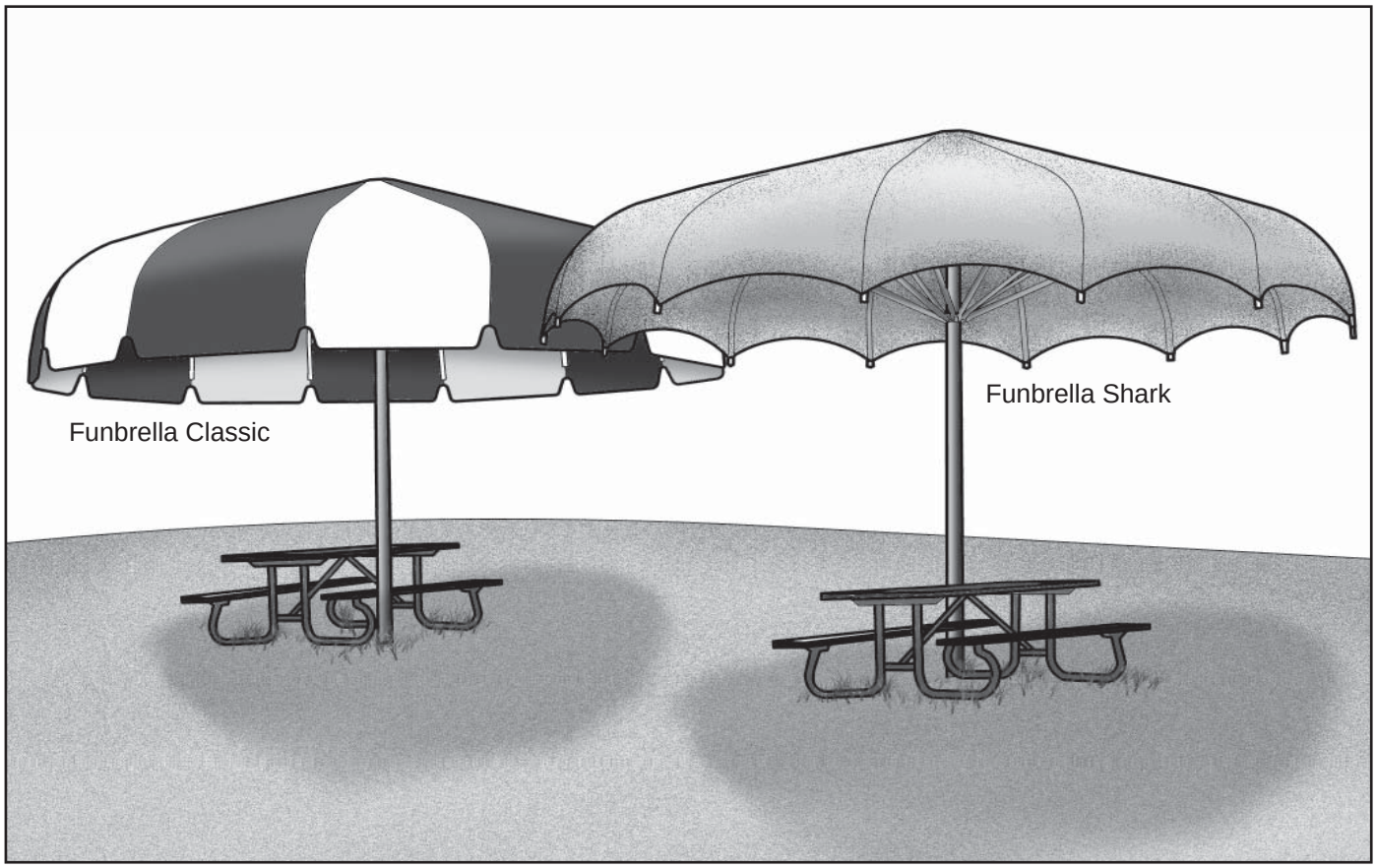

Please read all assembly/installation instructions before the installation or removal of this product.

ANCHOR® INDUSTRIES INC.

7701 Highway 41 N
Evansville, IN 47725
Phone: 812-867-2421
Fax: 812-867-1429
1-800-544-4445
email: tents@anchorinc.com
www.anchorinc.com

EC4995

FUNB 716
Rev 817

12’-0” DIAMETER FUNBRELLA FRAME

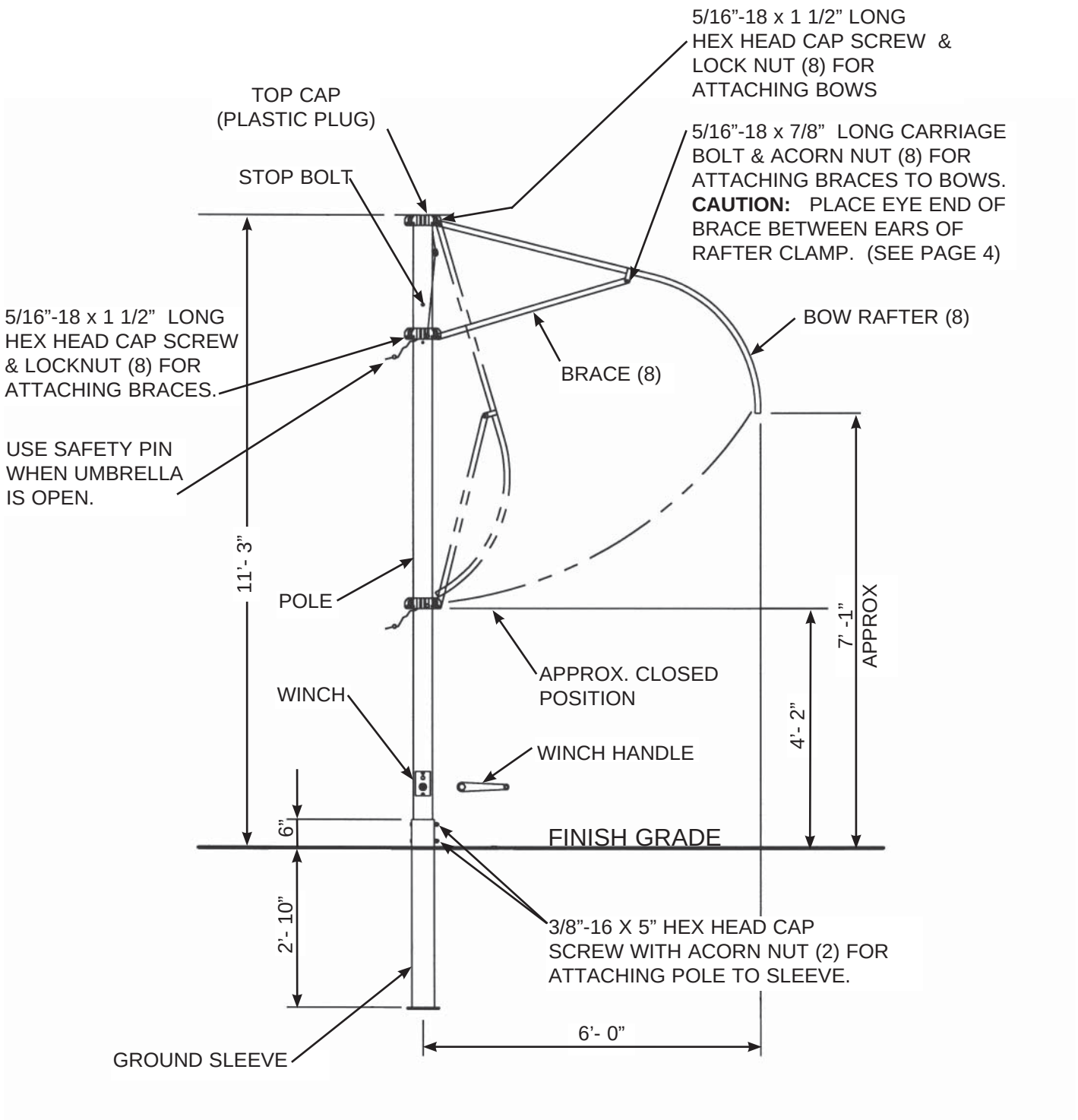

20’-0” DIAMETER FUNBRELLA FRAME

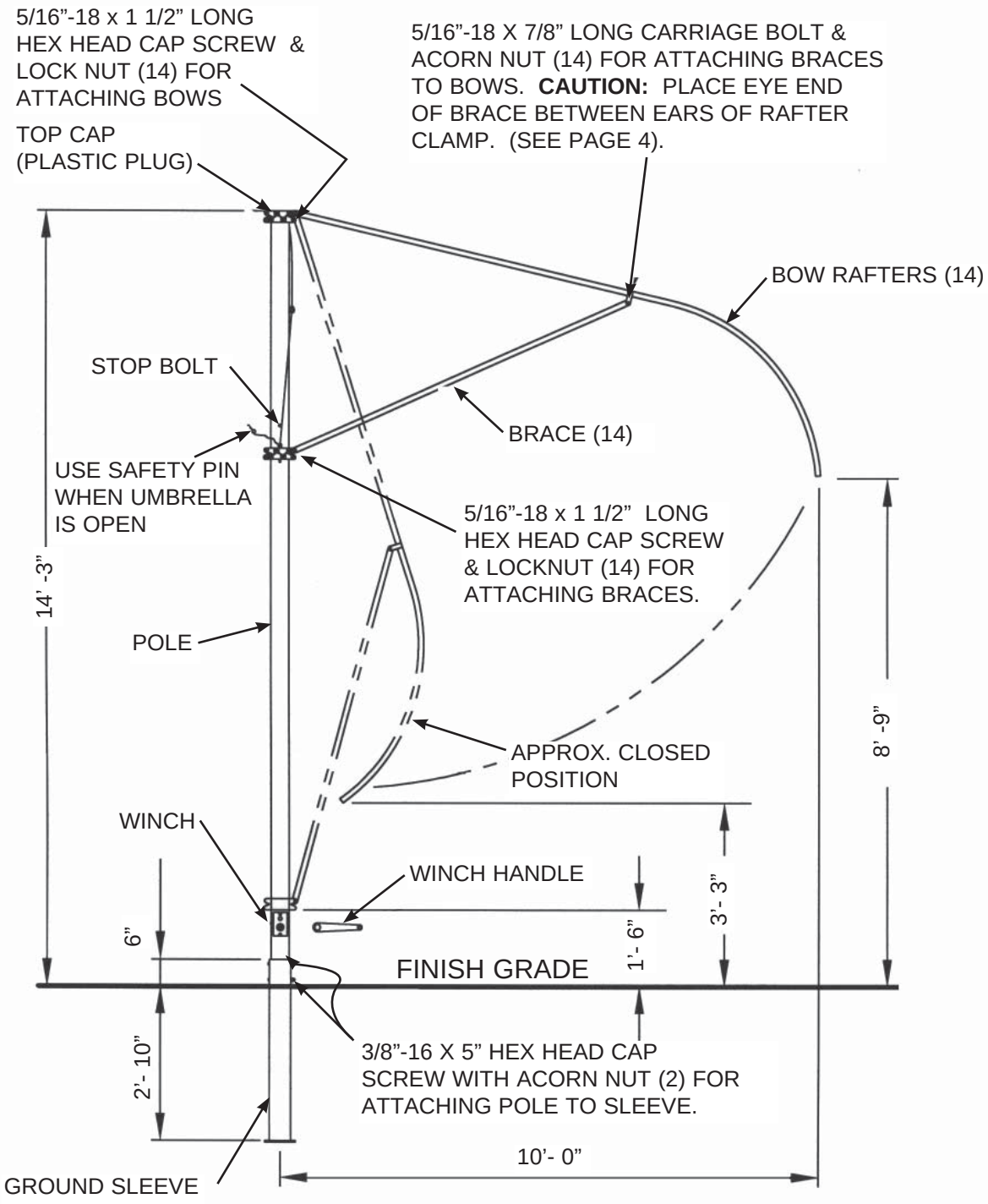

FUNBRELLA PARTS LIST		Size & Qty.	
Description	Item No.	12’	20’
Pole Assembly - 12’	8631256	1	-
Pole Assembly - 20’	8631352	-	1
Brace - 12’	8631241	8	-
Brace - 20’	8631341	-	14
Rafter with Pipe Clamp, nut & Bolt - 12’	8631231	8	-
Rafter with Pipe Clamp, nut & Bolt - 20’	8631331	-	14
Top Cap	3408750	1	1
Winch Handle	3650032	1	1
Ground Sleeve	8631320	1	1
5/16”-18 x 1 1/2” HHCS Bolt & Lock nut SS	3023121 & 3024271	16	28
3/8”-16 x 5” HHCS & Acorn Nut SS	3023303 & 3024365	2	2
5/16” - 18 x 7/8” Carriage Bolt & Acorn Nut SS	3021101 & 3024216	8	14

NOTE:

Concrete & gravel for setting ground sleeve is required. Installer to supply.

MANPOWER REQUIRED

Two experienced installers should be able to assemble a FUNBRELLA top and frame.

TOOLS REQUIRED

- (2) 1/2” wrenches
- 9/16” wrenches
- 5/8” wrench
- Level
- 10’ step ladder
- Post Hole digger

INSPECT SITE - CAUTION

Consult your local utility locator service or the National Utility Locating Contractors Association (NULCA) prior to installation.

Prior to actual assembly, be sure to look up, down, above & below for obstacles, pipes, wires, trouble, etc.

LAYOUT & CHECK

Use parts list for a quick identification and check list for proper quantities.

Warning: Do not install ground-sleeve or center pole where they may be in contact with water from swimming pool or any other body of water.

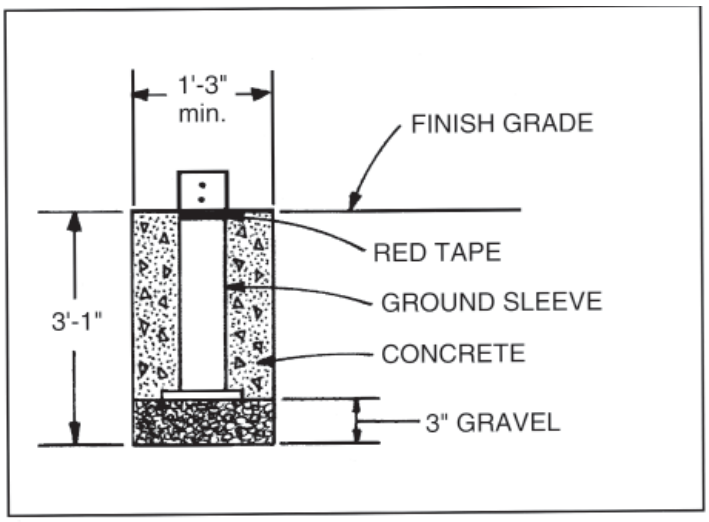

1 SET GROUND SLEEVE

Dig a 1’-3” minimum diameter hole 3’-1” deep or as required by soil conditions or local code. Add 3” of gravel. Insert ground sleeve with rectangular baseplate at bottom. Ground sleeve is marked with red tape indicating finished grade level.

Plumb sleeve brace into position during concrete pour.

Fill concrete to cover red tape. Allow to dry for 72 hours before mounting Funbrella frame.

Footing size shown is for clarity of installation only. Size of footings for the actual installation site is the responsibility of the installer.

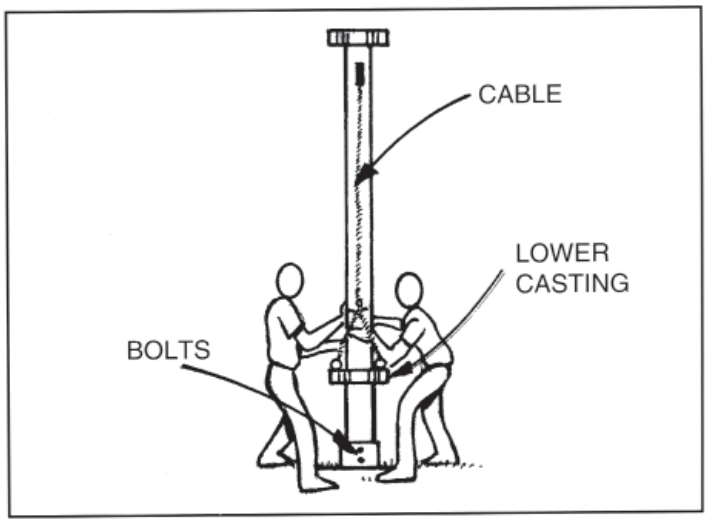

2 RAISE POLE

Raise Pole and insert into Ground Sleeve. Align holes and fasten with (2) 3/8” x 5” bolts and acorn nuts. Rotate lower casting so cable is parallel with pole.

3 ATTACH RAFTERS AND BRACES

Attach braces to clamp on each rafter with 5/16” x 7/8” carriage bolt and acorn nut.
Attach rafter to top casting and brace to lower casting with 5/16” x 1 1/2” cap screws and lock nuts.

Place top cap onto end of pole.

CAUTION

Position eye ends of braces between ears of rafter clamps (see detail) and be aware of rafter ends when working under the frame to avoid physical injury.

Over tightening of nuts can result in frame damage. When attaching rafters and braces, tighten to where one and a half threads are exposed. This allows free movement of parts.

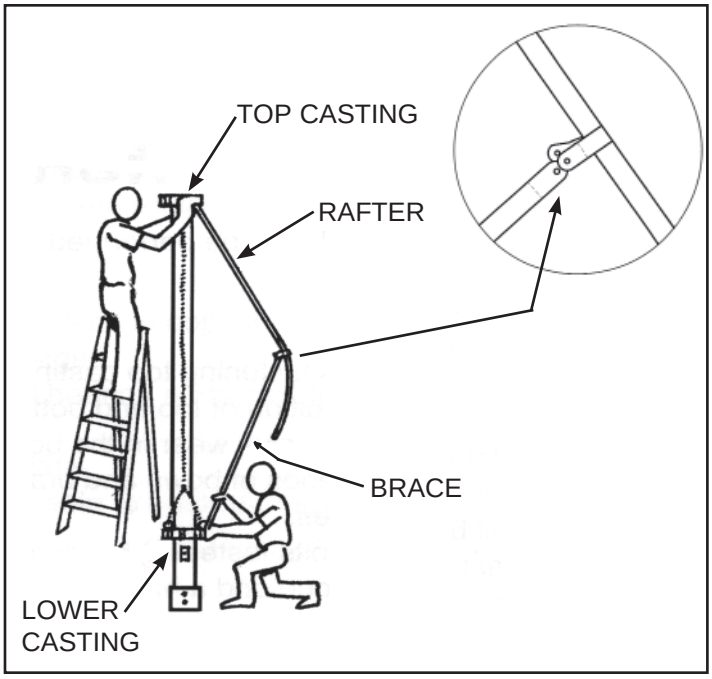

4 PLACE TOP ON FRAME

Using handle, crank winch clockwise to open frame partially. Place top with leather patch covering top plug and drape over frame.
For Sunbrella Tops, pull hooks to ends of rafters and through cap. Snap boot. Crank winch to open fully and insert safety pin.

For UV Shadecloth Tops, pull hook to end of one rafter and through cap. Proceed next to the rafter directly opposite the first rafter. Using short bursts, pull the fabric down until fabric is loosened enough to reach the end of the rafter. Proceed around the frame using the short-burst method as required. Fasten Velcro ties around rafters. Crank winch to open fully and insert safety pin.

WARNING:

When operating winch, handle must be on winch nut and under control of operator to prevent rapid closure of FUNBRELLA.

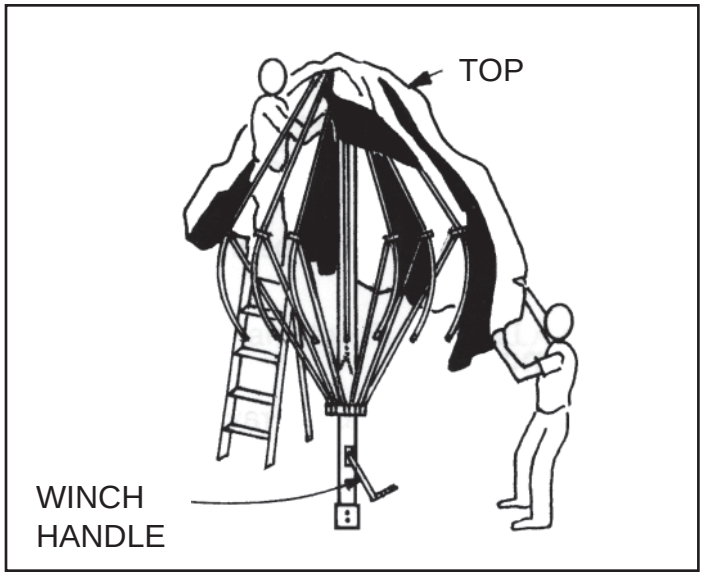

IMPORTANT

Proper installation suitable to site conditions is the responsibility of the installer.

For removal of pole, reverse steps 1 through 3 to prevent frame damage.

CAUTION

When high wind conditions are expected, or when lowering the Funbrella overnight, close the FUNBRELLA and tie the bows together to minimize movement that can cause accelerated wear. (See warning on page 7)

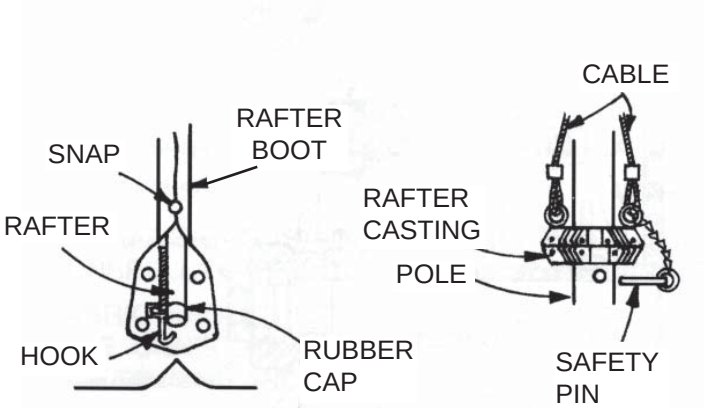

FUNBRELLA MAINTENANCE

Maintenance should be performed on the frame, winch assembly and fabric top at least once a year.

FRAME

1. Check bolts fastening top casting to center pole. Tighten or replace if worn.
2. Inspect condition of top and bottom aluminum castings. There should be no cracks in the hinge ears or excessive wear in the bolt holes.
3. Check flat ends of bows and braces. There should be no breaks in the metal or excessive wear to the bolt holes.
4. Check all bolts fastening bows and braces to the castings for wear. Lock nuts are to be tightened so at least one and a half threads are exposed beyond the nut. Over tightening can result in frame damage.

WINCH ASSEMBLY

Removal:

1. Lower Funbrella to fully closed position (on 20' model, use prop to hold lower brace casting above winch plate for clearance).
2. Remove (2) flat head phillips screws "A": (see drawing) at top and bottom of cover plate.
3. Hold winch handle nut in one hand and pull winch assembly from pole. Apply light pressure against cover plate toward pole while removing to prevent winch assembly from misaligning with ratchet pawl.

Maintenance:

1. Check condition of cable. Frayed or worn cable should be replaced.
2. Check condition of ratchet pawl, pawl torsion spring and ratchet wheel. Replace if worn.
3. Pawl flat head phillips screw should be tight at all times and ratchet pawl should move freely (if loose, check condition of pawl and retighten). Note: Models prior to July, 1996 use a ⅜" standard jam nut to secure this assembly. Locktite must be applied if nut is removed and/or replaced. Lubricate ratchet pawl assembly with a good grade of lithium based grease.

WINCH ASSEMBLY

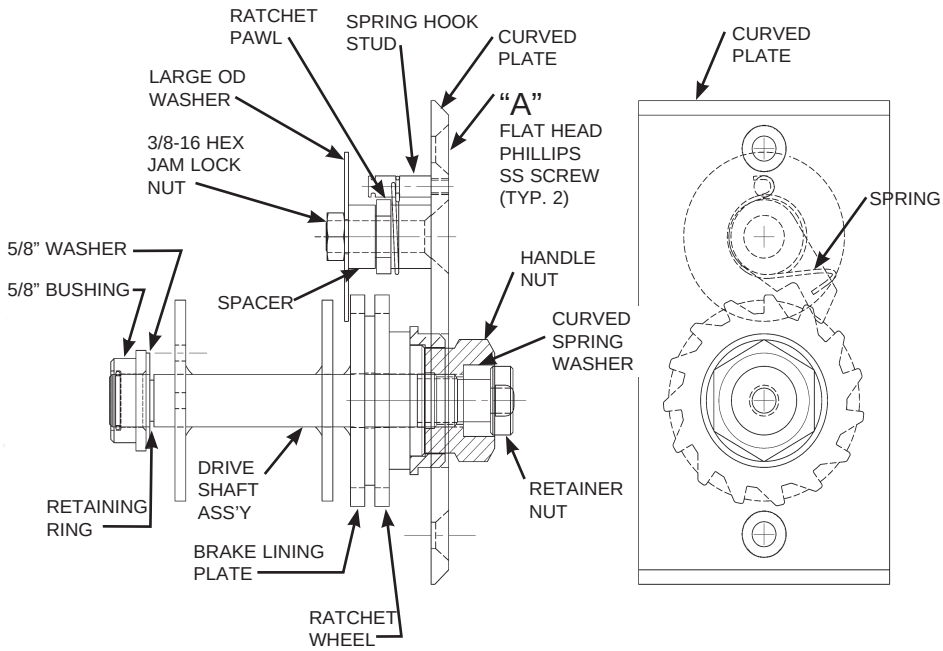

CUT-AWAY VIEW **FRONT VIEW**

4. Check condition of brake lining plate. If worn, replace. If glazed, sand lightly with fine sand paper.
5. Inspect entire assembly for any apparent worn or damaged parts and replace.

Replace:

1. Hold winch by winch handle nut. Apply pressure to winch cover place in opposite direction. Check alignment of ratchet pawl and ratchet wheel. They must be engaged.
2. Insert assembly into pole so that the drum shaft goes into small bearing on backside of pole and cover plate sets flush with front face of pole.
3. Install (2) flat head phillips screws at top and bottom of cover plate.
4. While winding cable on winch, maintain some pressure on the cable to ensure proper seating of cable on winch drum.

FABRIC TOP

1. Store fabric top in a cool, dry area. Never store while wet or damp. If prolonged storage is anticipated, clean with warm water and mild soap before storing.

FUNBRELLA TROUBLESHOOTING

1. FUNBRELLA fails to open when crank is turned clockwise.
   A. Check cable connections on outside of pole for breaks.
   B. Check cable inside pole for breaks (see winch maintenance).
2. When FUNBRELLA is raised, no clicking sound is made by winch and the FUNBRELLA does not hold its position when crank handle is released.
   A. See winch maintenance.
3. FUNBRELLA does not lower when crank is turned counterclockwise.
   A. Check that safety pin is removed.
   B. Check for bound cable on winch (see winch maintenance).

IMPORTANT FUNBRELLA NOTICE

WARNING:

DO NOT INSTALL GROUNDSLEEVE OR CENTER POLE WHERE THEY MAY BE IN CONTACT WITH WATER FROM SWIMMING POOL OR ANY OTHER BODY OF WATER.

STORAGE BAG IS FOR USE ONLY WHEN TOP IS REMOVED FROM FRAME. DO NOT STORE FUNBRELLA FABRIC TOP ON FRAME IN STORAGE BAG.

FABRIC SHOULD BE REMOVED FROM FRAME WHEN FRAME IS LOWERED FOR AN EXTENDED PERIOD OF TIME. WHEN FRAME IS LOWERED FOR SHORTER PERIODS OF TIME IT IS IMPORTANT TO “SECURE FRAME RAFTERS AND BRACES” TO MINIMIZE MOVEMENT AND PREVENT FABRIC AND FRAME DAMAGE.

THE FUNBRELLA FRAME AND TOP ARE DESIGNED FOR YEARS OF EXTENDED WEAR WHEN THESE INSTRUCTIONS ARE CAREFULLY FOLLOWED.

ANCHOR INDUSTRIES, INC.
7701 HIGHWAY 41 N, EVANSVILLE, IN 47725
PHONE: 812-867-2421 FAX: 812-867-1429
TOLL FREE: 1-800-255-5552

PHONE NUMBER
812 · 867 · 2421

FAX NUMBER
812 · 867 · 1429

Anchor products are of superior design and operate best within the parameters of these instructions. It is imperative that the instructions be carefully read and **COMPLETELY FOLLOWED**. Please read installation instructions before the installation or removal of this product. Installation instructions are available online at **www.anchorinc.com** or by calling 1-800-544-4445.

CAUTION:

1. For each installation, the installer is solely responsible for evaluating the site and the proper securing method determined. Some soils require different staking or securing than that provided with the tent. Due to this variety of soil conditions, these are the manufacturer's suggested sequence of installation procedures. Anchor's responsibility is limited to the manufacture of the tent parts and materials. We are not responsible for methods that installers may choose to erect and secure the tent to the ground.
2. The mounting method suggested in the installation instructions does not necessarily meet all or any relevant codes on the site of the installation. The method suggested **will, in many cases, keep the structure erected,** however, due to various soil conditions; this method may be insufficient **to keep the structure secure in high winds**. It is the installer's responsibility, not the manufacturer, to determine the appropriate method of securing the structure to meet the necessary wind loads on the site. Regardless of the mounting method we suggest, we make no representation or warranty as to whether the mounting method suggested will meet the local code. Anchor does not, nor can it make any suggestions, representation, or warranties about the adequate mounting required at each specific installation site.
3. Inasmuch as the weather is unpredictable, good judgment and common sense must be incorporated within installation guidelines. It is the responsibility of the installer/maintainer to determine the severity of the weather, proper time and method of installation and/or erection and disassembly. **Note: We recommend that snow and ice be removed from the tent surface as soon as possible because accumulation will damage the tent or fabric structure. Please consult with our Engineering Department about the maximum loads for each product.**

   This product has been manufactured for use as a temporary sunshade structure. For the safety of all occupants, evacuation is recommended if threatening weather occurs, or if there is any doubt concerning the safe use of this product.
4. Proper safety equipment should be used at all times to insure a safe installation and take down. We suggest a careful evaluation be made to determine safety equipment needed, such as hard hats, steel-toe shoes, safety glasses and other as required. It is our desire that all installations are safe. Please be aware of hidden dangers both underground, i.e., gas lines, water lines, electrical lines, etc. and above the tent such as power lines and telephone lines.
5. Anchor stands behind its products in accordance with its standard Terms and Conditions of sale. A copy of our Terms and Conditions of Sale can be obtained by contacting Anchor at the telephone number and/or address on this document.