Installation Instructions
Funbrella® Groundsleeve

Installing A (1) Piece Ground Sleeve

Dig a 1'-3" minimum diameter hole 3'-1" deep or as required by soil conditions or local code. Add 3" of gravel. Insert ground sleeve with rectangular base plate at bottom. Ground Sleeve is marked with red tape indicating finished grade level.

Plumb sleeve and brace into position during concrete pour.

Fill concrete to cover red tape. Allow concrete to dry 72 hours before mounting Funbrella Frame.

See Figure 1.

Note: Concrete and gravel for setting Ground Sleeve is required. Installer to supply.

Note: Footing size shown is for clarity of installation only. Size of footings for the actual installation site is the responsibility of the installer.

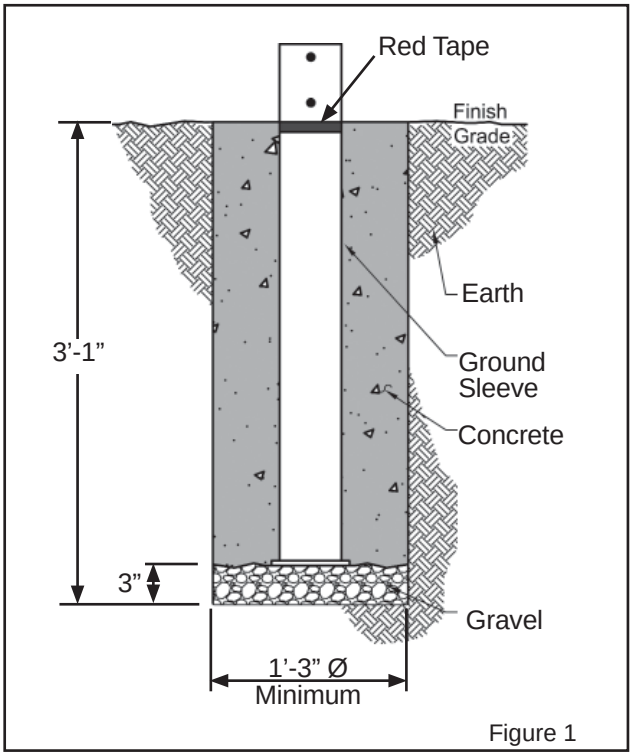

Figure 1

Installing A (2) Piece Ground Sleeve

Dig a 1'-3" minimum diameter hole 3'-1" deep or as required by soil conditions or local code. Add 3" of gravel. Insert ground sleeve with rectangular base plate at bottom. Top of bottom plate should set 3/8" below grade so that when top plate is attached, top of plate is flush with grade.

Plumb sleeve and brace into position during concrete pour.

Fill concrete to flush with top plate. (See Figure 2) Allow concrete to dry 72 hours before mounting Funbrella Frame.

Use flat cover plate when Funbrella is not in use.

Note: Concrete and gravel for setting Ground Sleeve is required. Installer to supply.

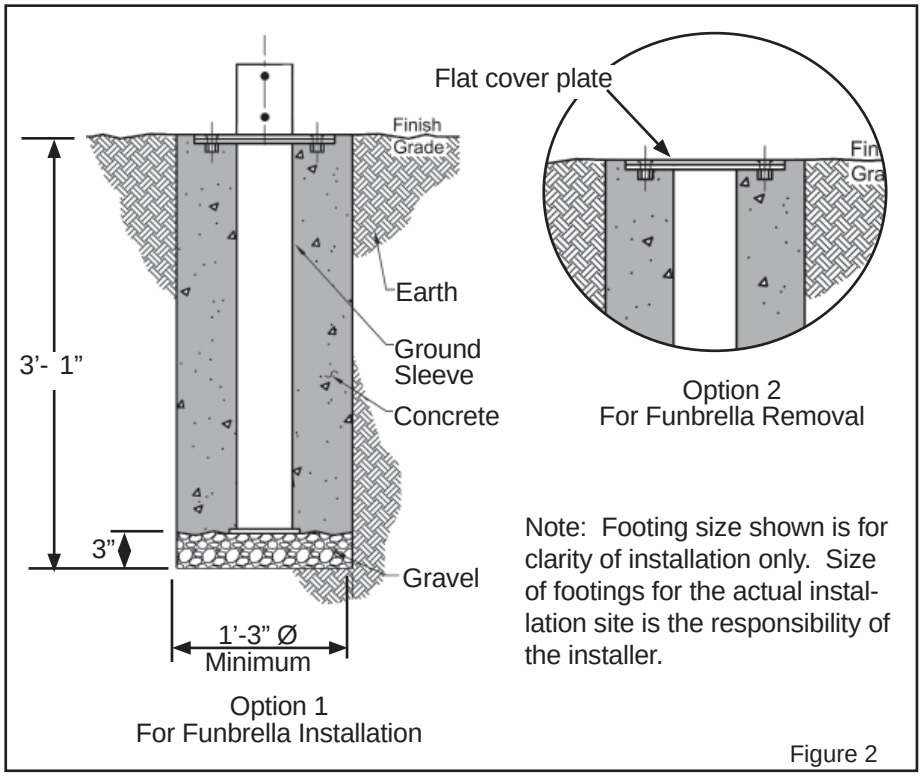

Figure 2

Anchor Industries Inc.
7701 Highway 41 N
Evansville, IN 47725
Phone: 812-867-2421
Fax: 812-867-1429
1-800-255-5552
email: custdiv@anchorinc.com
www.anchorinc.com

PHONE NUMBER
812· 867· 2421

FAX NUMBER
812· 867· 1429

Anchor products are of superior design and operate best within the parameters of these instructions. It is imperative that the instructions be carefully read and **COMPLETELY FOLLOWED**. Please read installation instructions before the installation or removal of this product. Installation instructions are available online at **www.anchorinc.com** or by calling 1-800-544-4445.

CAUTION:

1. For each installation, the installer is solely responsible for evaluating the site and the proper securing method determined. Some soils require different staking or securing than that provided with the tent. Due to this variety of soil conditions, these are the manufacturer's suggested sequence of installation procedures. Anchor's responsibility is limited to the manufacture of the tent parts and materials. We are not responsible for methods that installers may choose to erect and secure the tent to the ground.
2. The mounting method suggested in the installation instructions does not necessarily meet all or any relevant codes on the site of the installation. The method suggested **will, in many cases, keep the structure erected,** however, due to various soil conditions; this method may be insufficient **to keep the structure secure in high winds**. It is the installer's responsibility, not the manufacturer, to determine the appropriate method of securing the structure to meet the necessary wind loads on the site. Regardless of the mounting method we suggest, we make no representation or warranty as to whether the mounting method suggested will meet the local code. Anchor does not, nor can it make any suggestions, representation, or warranties about the adequate mounting required at each specific installation site.
3. Inasmuch as the weather is unpredictable, good judgment and common sense must be incorporated within installation guidelines. It is the responsibility of the installer/maintainer to determine the severity of the weather, proper time and method of installation and/or erection and disassembly. **Note: We recommend that snow and ice be removed from the tent surface as soon as possible because accumulation will damage the tent or fabric structure. Please consult with our Engineering Department about the maximum loads for each product.**

   This product has been manufactured for use as a temporary sunshade structure. For the safety of all occupants, evacuation is recommended if threatening weather occurs, or if there is any doubt concerning the safe use of this product.
4. Proper safety equipment should be used at all times to insure a safe installation and take down. We suggest a careful evaluation be made to determine safety equipment needed, such as hard hats, steel-toe shoes, safety glasses and other as required. It is our desire that all installations are safe. Please be aware of hidden dangers both underground, i.e., gas lines, water lines, electrical lines, etc. and above the tent such as power lines and telephone lines.
5. Anchor stands behind its products in accordance with its standard Terms and Conditions of sale. A copy of our Terms and Conditions of Sale can be obtained by contacting Anchor at the telephone number and/or address on this document.