Installation Instructions
Funbrella® Palm

Please read all assembly/installation instructions before the installation or removal of this product.

ANCHOR® INDUSTRIES INC.

7701 Highway 41 N
Evansville, IN 47725
Phone: 812-867-2421
Fax: 812-867-1429
1-800-544-4445
email: tents@anchorinc.com
www.anchorinc.com

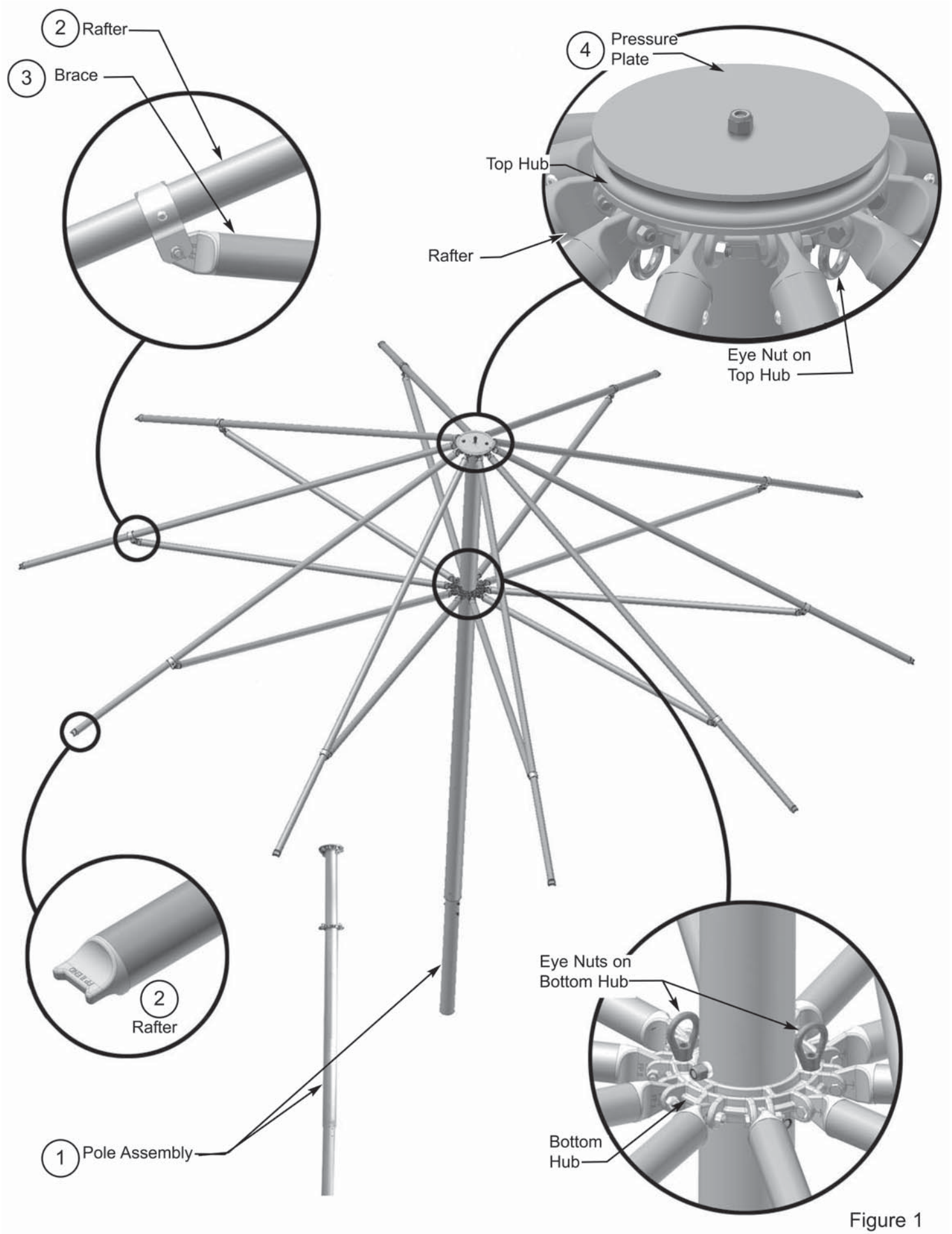
2 Rafter
3 Brace
4 Pressure Plate
Top Hub
Rafter
Eye Nut on Top Hub
2 Rafter
Eye Nuts on Bottom Hub
Bottom Hub
1 Pole Assembly

Figure 1

FUNBRELLA PALM PARTS LIST		
ITEM NO.	QUANTITY	DESCRIPTION
1	1	Pole Assembly
2	10	Rafters
3	10	Braces
4	1	Pressure Plate
5	20	3/8” x 1 3/4” Hex Head Bolt
6	10	3/8” x 1 1/4” Hex Head Bolt
7	30	3/8” Lock Nut
8	2	3/8” x 5” Hex Head Bolt
9	2	3/8” Cap Nut

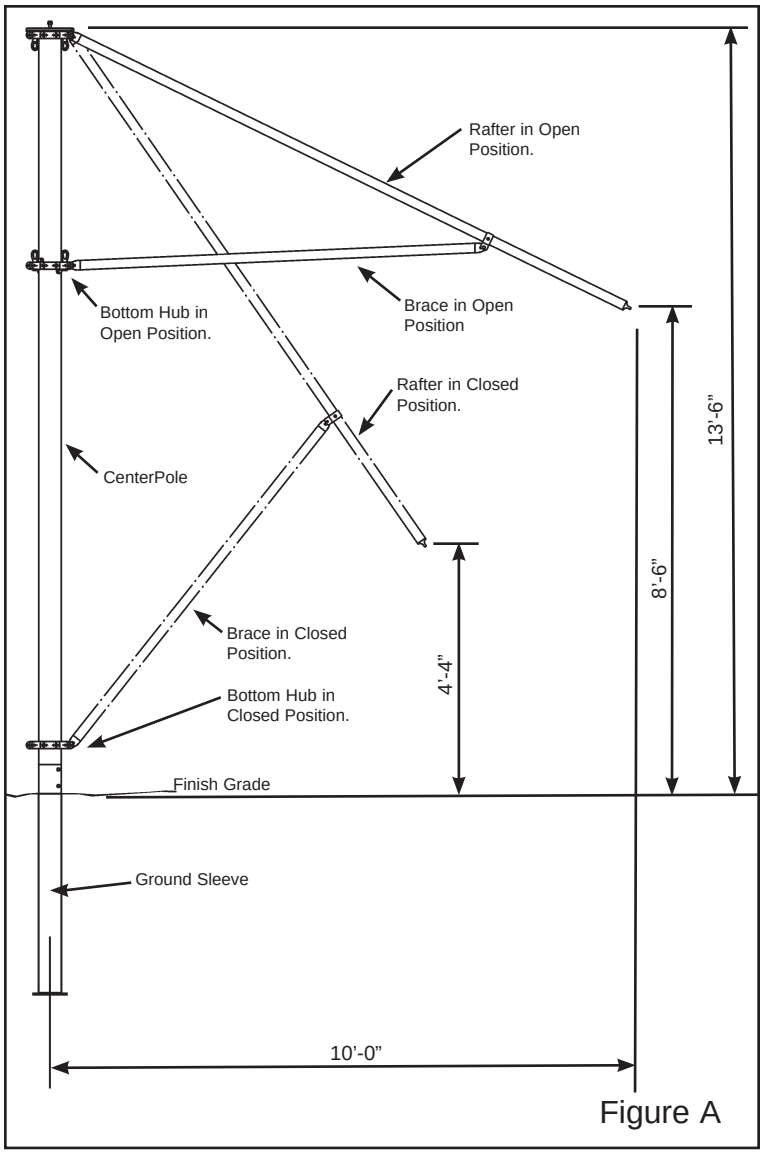

Figure A

MANPOWER REQUIRED

Two experienced installers should be able to assemble a Funbrella Palm top & frame in two hours.

INSPECT SITE - CAUTION

Consult local Utility Company prior to installation. Prior to assembly be sure to look around for obstacles, pipes, wires and etc.

LAYOUT & CHECK

Use parts list for a quick identification and check list for proper quantities.

TOOLS REQUIRED

9/16” Wrench • 5/8” Wrench • 3/4” Wrench
(2) 10’ Stepladders
(1) 16’ Extension Ladder
Post Hole Digger (optional...required only to dig hole for ground sleeve)
(2) Cable Come-A-Longs (minimum 800 lb. rating, minimum 10’-0” pull) - sold separately

Warning: Do not install groundsleeve or center pole where they may be in contact with water from swimming pool or any other body of water.

SET GROUND SLEEVE (SOLD SEPARATELY)

Dig a 1’-3” minimum diameter hole 3’-1” deep or as required by soil conditions or local code. Add 3” of gravel. Insert ground sleeve with 6” square plate on bottom. Ground sleeve is marked with red tape indicating finished grade level. (**Figure B**)

Plumb sleeve and brace into position during concrete pour.

Fill concrete to cover red tape. Allow to dry for 72 hours before mounting Funbrella Palm center pole.

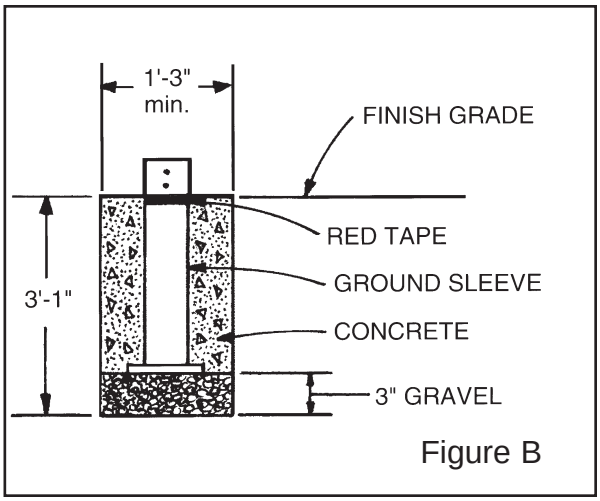

Figure B

STEP 1

Set Center Pole Assembly into ground sleeve and secure with (2) 3/8” x 5” Bolts, and (2) 3/8” Cap Nuts. (Items # 8 & 9 on Parts List - Page 2.)

(**Figures 1a & 1b**)

After raising pole, remove bolt, nut and spacers under bottom hub and set aside for later use. Carefully slide the hub to the bottom of the pole.

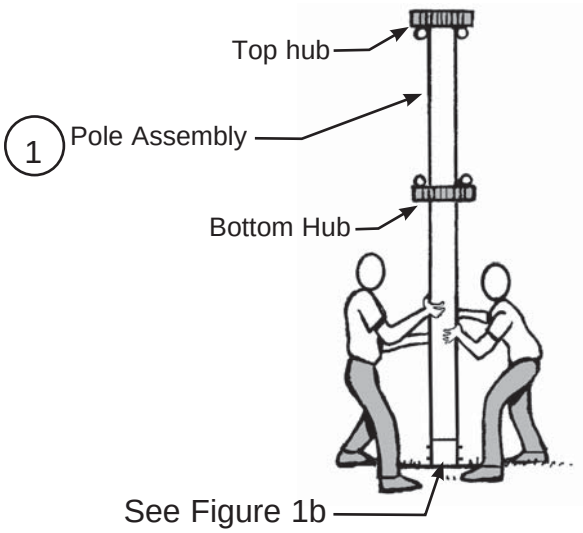

Figure 1a

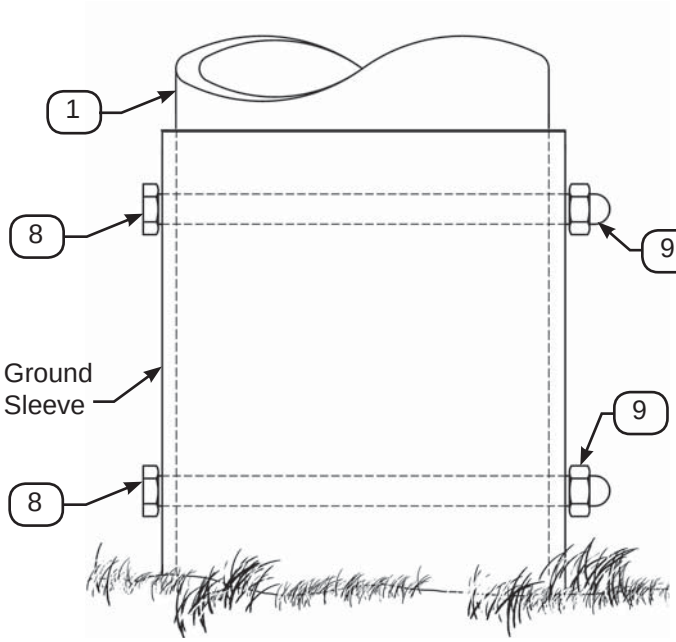

Figure 1b

STEP 2

Using extension ladder, install rafters to top hub with 3/8” x 1 3/4” Bolts (**Item 5**) and 3/8” Nuts (**Item 7**).

Important: Install last two rafters at the same time. To avoid interference, insert Bolt (**Item 5**) into hole, thru rafter with end of bolt flush to edge of casting. (**Figure 2a**)

Then, insert last bolt into last hole and thru rafter. (**Figures 2b & 2c**)

Now place nuts on bolts and tighten - do not over-tighten. (**Figure 2d**)

Examine bottom hub to be sure it is rotated so that eyenuts on bottom hub are in-line with eyenuts on top hub.

Repeat the installation process with braces (**Items 3**) onto bottom hub on pole assembly.

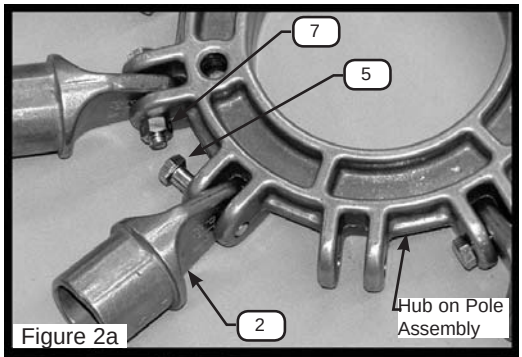

Figure 2a

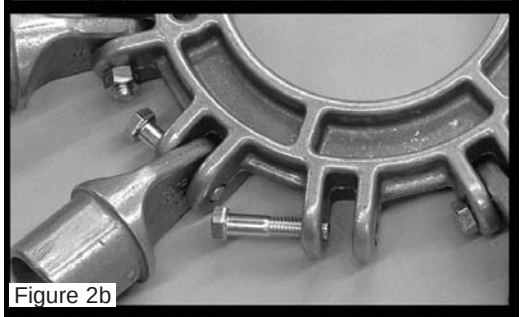

Figure 2b

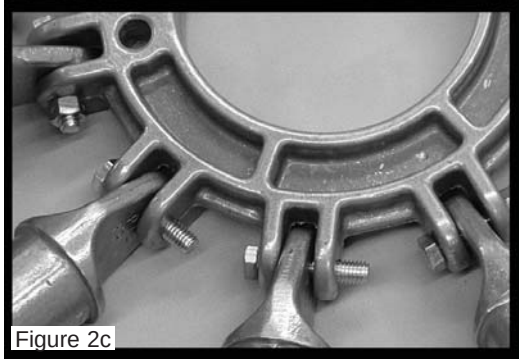

Figure 2c

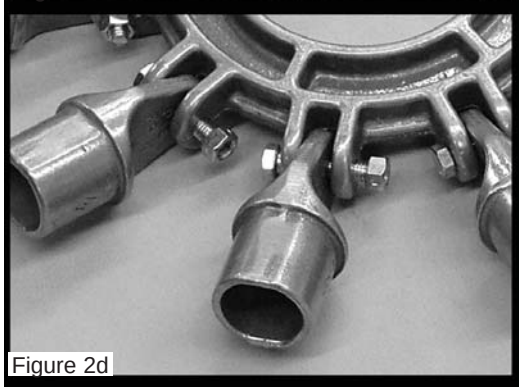

Figure 2d

STEP 3

Assemble rafters (**Item 2**) to braces (**Item 3**) using 3/8” x 1 3/4” Bolts (**Item 6**) & Nuts (**Item 7**).

See **Figure 3**.

Assemble all ten Rafters to Braces.

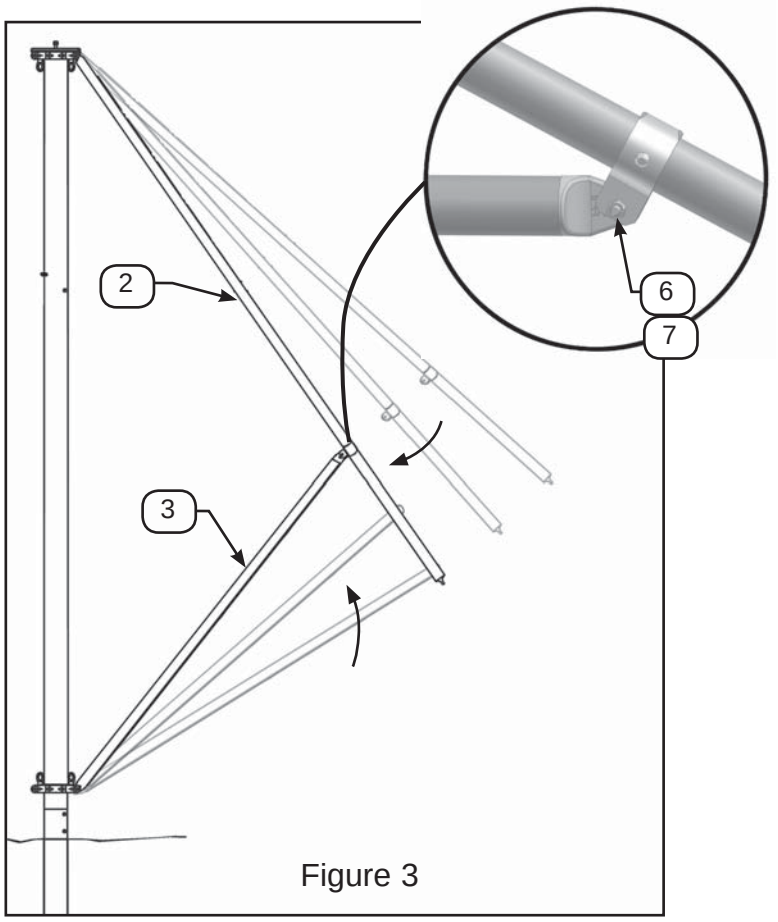

Figure 3

STEP 4

Snap (2) Ratchet Come-A-Longs (purchased separately) to the eyebolts on top hubs and to the eye-bolts on bottom hub (**Figure 4a**). Ratchets should be set close to bottom hub (**Figure 4b**) .

Caution: Be certain that ratchet is securely connected to top & bottom hubs to prevent bottom hub from falling - Injury could occur.

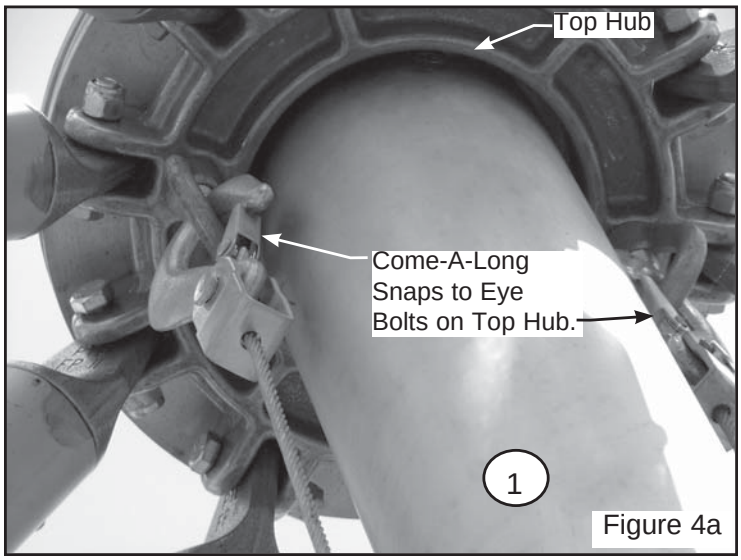

Figure 4a

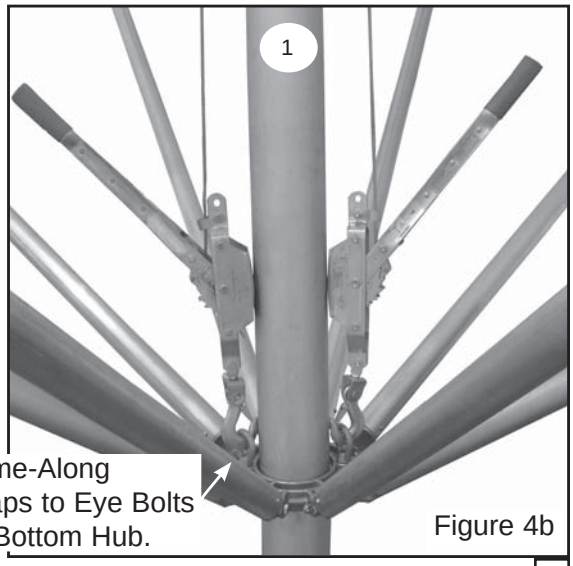

Figure 4b

STEP 5

Using extension ladder, climb to top of pole with 3/4” wrench and fabric bundle. Remove nut and pressure plate from pin at top of pole assembly. (**Do Not unroll fabric bundle until it is on top of pole.**)
Center hole in top fabric on pin, and let fabric drop (**Figure 5**).
Line up seams with rafters.
When hole is centered and seams are aligned, place pressure plate on pin and tighten nut with wrench.

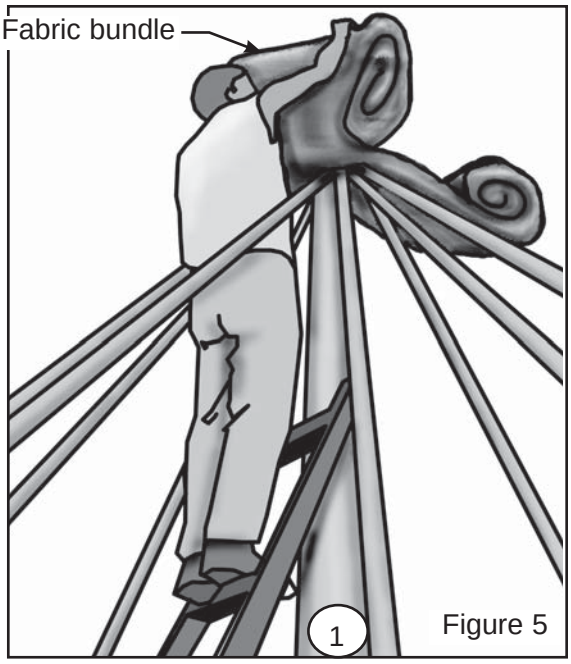

Figure 5

STEP 6

Position 2 persons at end of one of the rafters. Pull fabric seam off to side of rafter and insert hook on bottom of fabric in hole on bottom side of the corresponding rafter (**Figure 6).** While one person pulls fabric down, other person should line up strap to fit between nubs on end of rafter. Continue this process until fabric is secured all the way around.

Note: Fabric top has been designed smaller than frame to allow for the taut look of the Palm. If strap does not reach nubs after pulling, let go of fabric and let top relax for 10 seconds. Then repeat until installed.

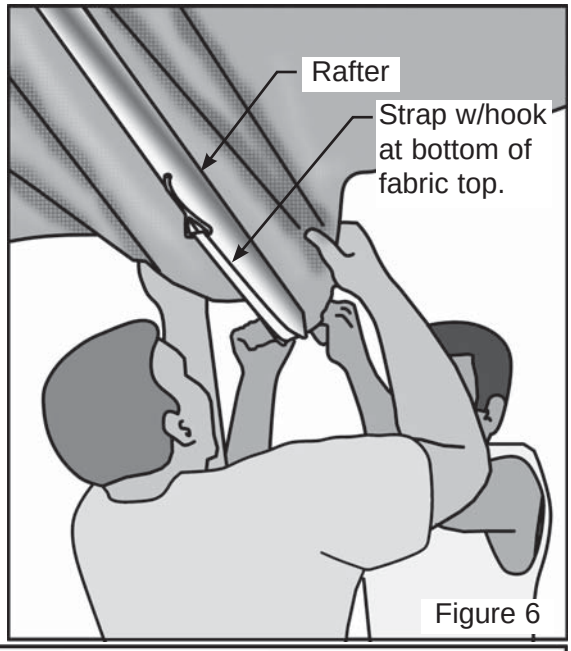

Figure 6

STEP 7

You are now ready to raise the rafters. Using 2 persons, ratchet lower hub up in unison. Persons may be able to stand on the ground until the hub is raised too high and then step ladders will be required. (**Figure 7**)
When hub is ratcheted to its highest point, retrieve Bolt and Nut and spacers (set aside at step 4). Install them back into the center pole as they were prior to lowering the bottom hub.

Caution: Bolt/nut & spacers **must** be installed to prevent bottom hub with rafters from sliding down center pole.

You may now remove the Come-A-Longs.

Your funbrella Palm is now ready for use.

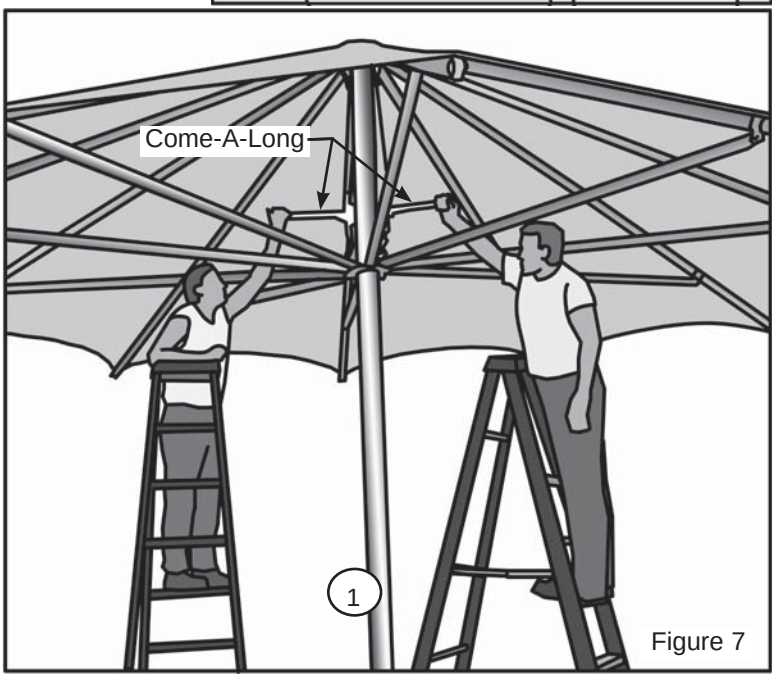

Figure 7

IMPORTANT

Proper installation suitable to site conditions is the responsibility of the installer.

For removal of pole, reverse steps 1 through 7 to prevent frame damage.

CAUTION:

When high wind conditions are expected, use Come-A-Longs to lower Funbrella Palm and remove top. Then either raise frame and insert bolt/nut/spacer assembly to hold bottom hub in place - or - remove rafters and braces.

FUNBRELLA PALM MAINTENANCE

Maintenance should be performed on the frame and top at least once a year.

Frame:

1. Check bolts fastening top hub casting to center pole. Tighten or replace if worn.
2. Inspect condition of top and bottom aluminum hub castings. There should be no cracks in the hinge ears or excessive wear in the bolt holes.
3. Check flat ends of bows and braces. There should be no breaks in the metal or excessive wear to the bolt holes.
4. Check all bolts fastening bows and braces to the castings for wear. Lock nuts are to be tightened so at least one and one half threads are exposed beyond the nut. Over-tightening can result in frame damage.

Fabric Top:

1. Store fabric top in a cool, dry area. If prolonged storage is anticipated, clean with warm water and mild soap. Never store while wet or damp.
2. Contact with organic solvents, halogens, cleaning solutions or highly acidic substances may reduce the service life of the fabric and void the warranty.

IMPORTANT FUNBRELLA PALM NOTICE

WARNING:

Do not install groundsleeve or center pole where they may be in contact with water from swimming pool or any other body of water.

Fabric should be removed from frame when frame is lowered for an extended period of time. After fabric is removed, either raise frame and insert bolt/nut/spacer assembly to hold bottom hub in place - or - remove rafters and braces. Accelerated wear of fabric, rafters and braces will occur if unit is lowered for any period of time.

The Funbrella Palm Frame and Top are designed for years of extended wear when these instructions are carefully followed.

PHONE NUMBER
812 · 867 · 2421

FAX NUMBER
812 · 867 · 1429

Anchor products are of superior design and operate best within the parameters of these instructions. It is imperative that the instructions be carefully read and **COMPLETELY FOLLOWED**. Please read installation instructions before the installation or removal of this product. Installation instructions are available online at **www.anchorinc.com** or by calling 1-800-544-4445.

CAUTION:

1. For each installation, the installer is solely responsible for evaluating the site and the proper securing method determined. Some soils require different staking or securing than that provided with the tent. Due to this variety of soil conditions, these are the manufacturer's suggested sequence of installation procedures. Anchor's responsibility is limited to the manufacture of the tent parts and materials. We are not responsible for methods that installers may choose to erect and secure the tent to the ground.
2. The mounting method suggested in the installation instructions does not necessarily meet all or any relevant codes on the site of the installation. The method suggested **will, in many cases, keep the structure erected,** however, due to various soil conditions; this method may be insufficient **to keep the structure secure in high winds**. It is the installer's responsibility, not the manufacturer, to determine the appropriate method of securing the structure to meet the necessary wind loads on the site. Regardless of the mounting method we suggest, we make no representation or warranty as to whether the mounting method suggested will meet the local code. Anchor does not, nor can it make any suggestions, representation, or warranties about the adequate mounting required at each specific installation site.
3. Inasmuch as the weather is unpredictable, good judgment and common sense must be incorporated within installation guidelines. It is the responsibility of the installer/maintainer to determine the severity of the weather, proper time and method of installation and/or erection and disassembly. **Note: We recommend that snow and ice be removed from the tent surface as soon as possible because accumulation will damage the tent or fabric structure. Please consult with our Engineering Department about the maximum loads for each product.**

   This product has been manufactured for use as a temporary sunshade structure. For the safety of all occupants, evacuation is recommended if threatening weather occurs, or if there is any doubt concerning the safe use of this product.
4. Proper safety equipment should be used at all times to insure a safe installation and take down. We suggest a careful evaluation be made to determine safety equipment needed, such as hard hats, steel-toe shoes, safety glasses and other as required. It is our desire that all installations are safe. Please be aware of hidden dangers both underground, i.e., gas lines, water lines, electrical lines, etc. and above the tent such as power lines and telephone lines.
5. Anchor stands behind its products in accordance with its standard Terms and Conditions of sale. A copy of our Terms and Conditions of Sale can be obtained by contacting Anchor at the telephone number and/or address on this document.