PAR36

DESCRIPTION

The Brilliance LED PAR36 Bipin is designed to better fit into standard, low voltage, PAR36 fixtures and have a longer lamp life. These LEDs are thermally engineered to operate in enclosed fixtures and provide added security by automatically cooling down, and reducing lumen output when exposed to extreme heat (air temperatures above 125°F). There is no color shift when lumen output is reduced

FEATURES

- Gen 5 earth tone colored housing
- Dimmable with most magnetic transformers
- Enhanced ESD (Electro-Static Discharge) protection (IEC-61000-4-2)
- Heat overload protection technology
- Fully potted PC board
- UL & FCC compliant

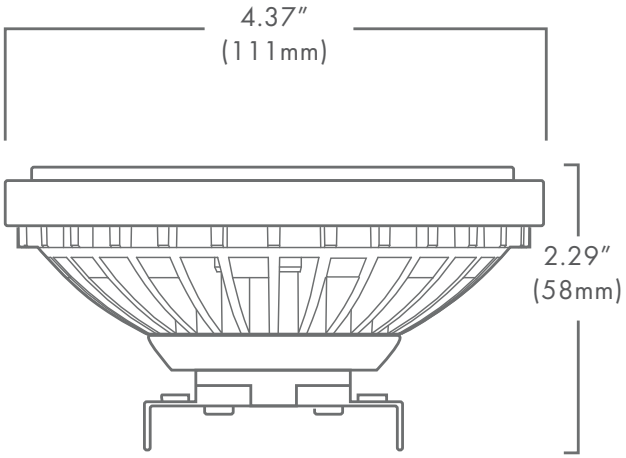

Part Number: **PAR36-X-XXXX-XXX**

Wattage | Kelvin/ Color | Beam spread

Wattage	**4, 7, 11, 15**
Beam Spread	**15°, 30°, 60°, 120°**
Color	**Red, Green, Blue, Amber, Silver Green (Color in 7&11W only)**
Kelvin Temperature	**2200, 2700, 3000, 5700**
Operating Range	**8-25 VAC**
Replaces	**20W, 35W, 50W Halogen**
CRI	**85**
IP	**68**
Chipset	**CREE**
Lamp Life (hours)	**50,000**
Warranty (years)	**5**

Lumens	**2200K**	**2700K**	**3000K**	**5700K**
4W	NA	435	470	520
7W	600	675	700	800
11W	800	900	950	1150
15W	1100	1430	1530	1650