BRILLIANCE LED®
A HIGHER LIGHT FORM®

SMALL LED LIGHT BAR MOUNTING BRACKET

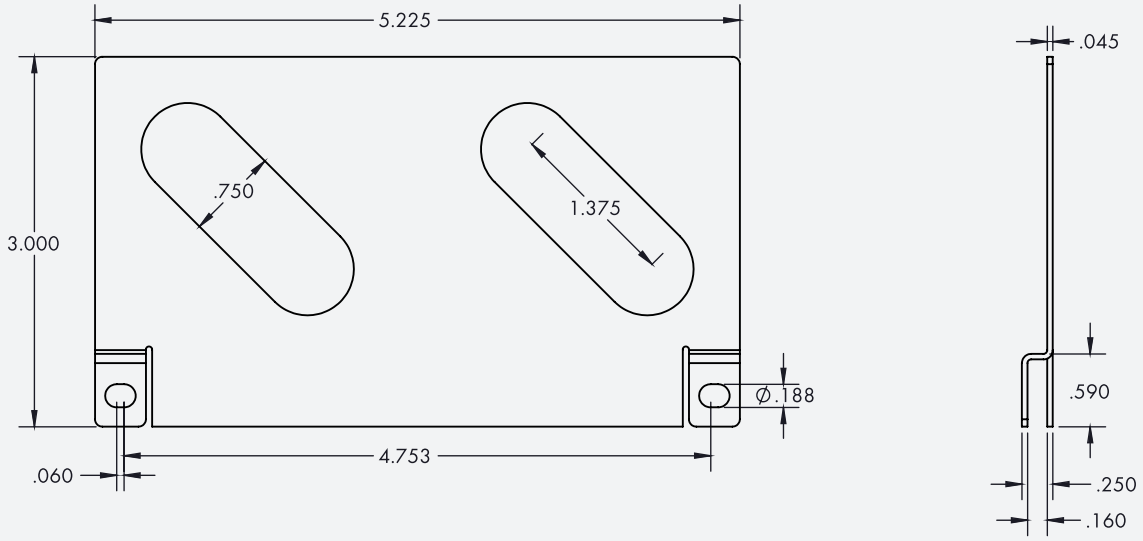

MEDIUM LED LIGHT BAR MOUNTING BRACKET

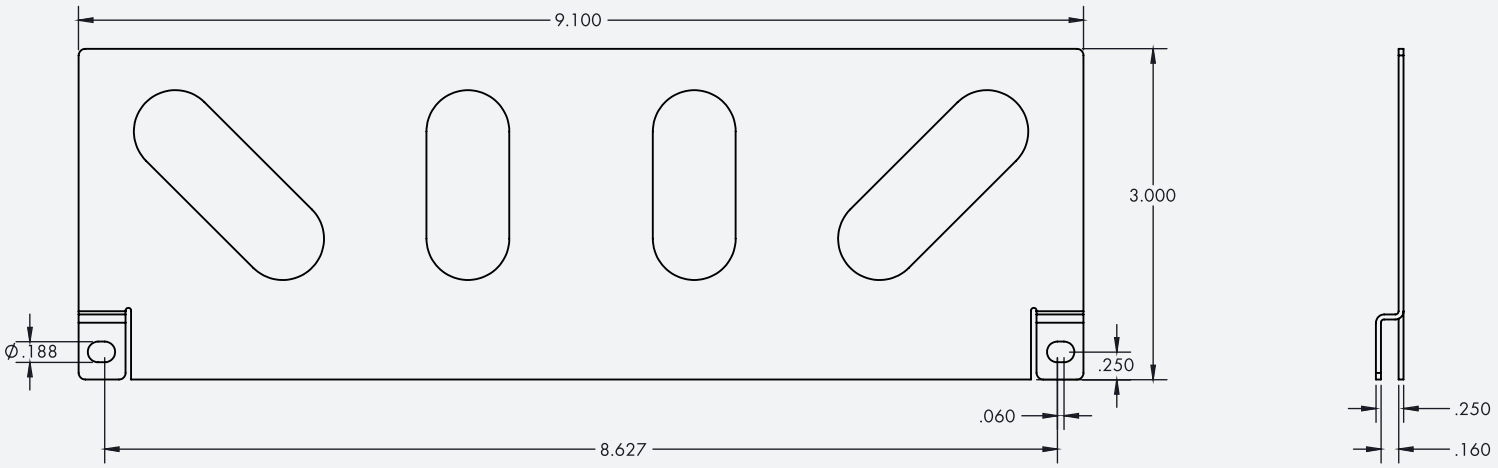

LARGE LED LIGHT BAR MOUNTING BRACKET

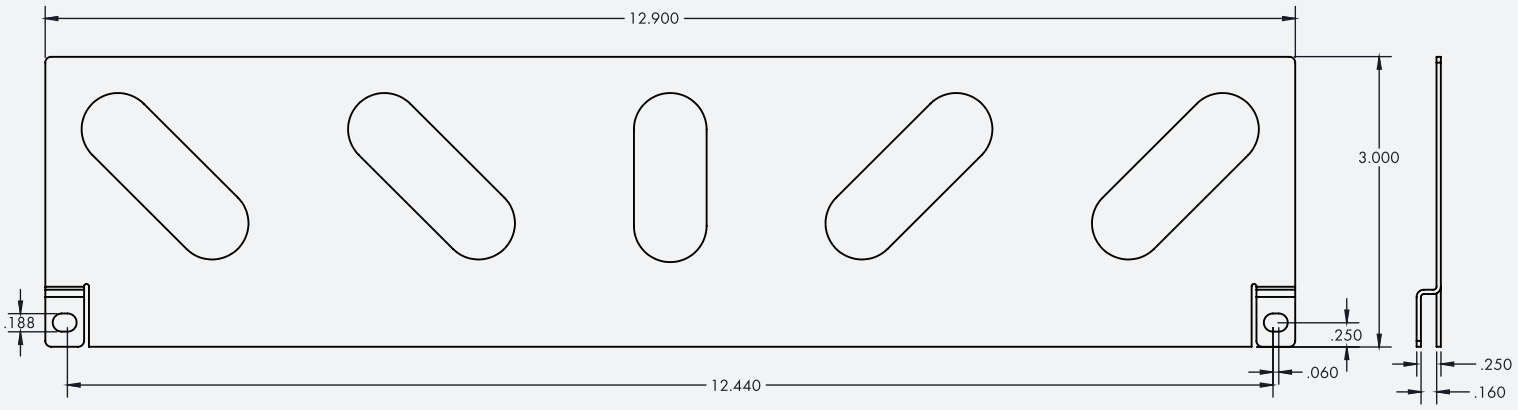

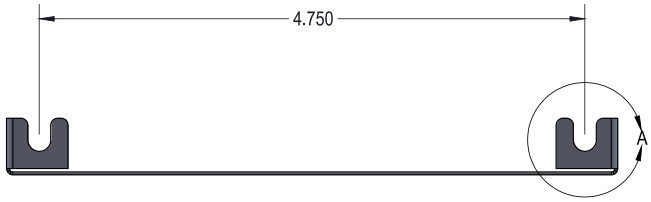

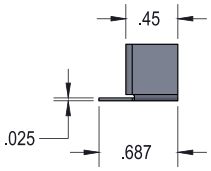

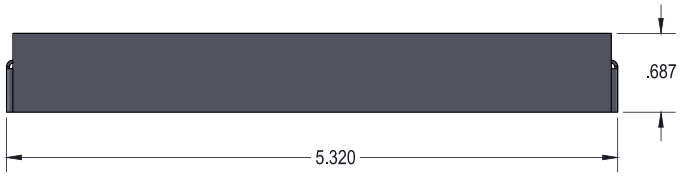

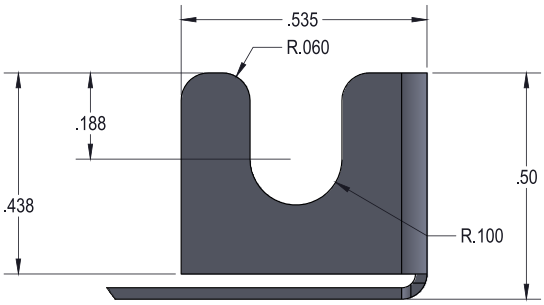

LIGHT BAR SHIELD SMALL LED

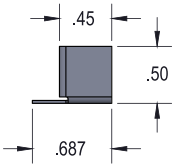

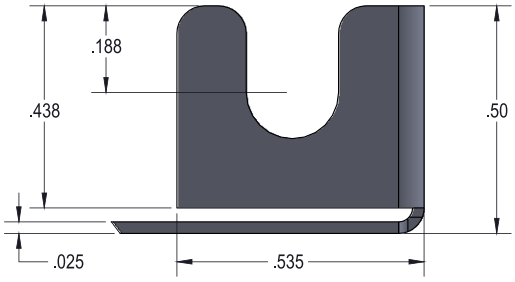

LIGHT BAR SHIELD MEDIUM LED