CLASS 125 CAST BRONZE & NO LEAD BRONZE FITTINGS AND CLASS 150 COMPANION FLANGES

MATERIAL SPECIFICATIONS:

- ASTM B584 Copper Alloy Sand Casting (Standard Specification for Copper Alloy Sand Castings for General Applications)
- C83600 Bronze for 2-BR leaded bronze series fittings and companion flanges
- C89833 NL Bronze for NLBR no lead bronze series fittings and companion flanges
- For steam, water, oil, and air service

Pb NO LEAD ✓ <0.25% Pb by weighted avg.

DIMENSIONAL SPECIFICATIONS:

- ANSI/ASME B16.15 Threaded Fittings (Standard Specification for Cast Copper Alloy Threaded Fittings: Classes 125 and 250)
- ANSI/ASME B16.24 Flanges - For Class 150 companion flanges (Standard Specification for Cast Copper Alloy Pipe Flanges, Flanged Fittings, and Valves: Classes 150, 300, 600, 900, 1500, and 2500)
- NPFC-A-A-59617 Unions (Specification for Unions, Brass or Bronze, Threaded Pipe Connections and Solder-Joint Tube Connections)

IAPMO R&T ®

THREAD SPECIFICATIONS:

- ANSI/ASME B1.20.1 Pipe Threads (Standard Specification for Pipe Threads, General Purpose, Inch)

CERTIFICATION:

- NSF/ANSI 61 - No lead bronze series only (Drinking Water System Components - Health Effects)
- CRNs are available

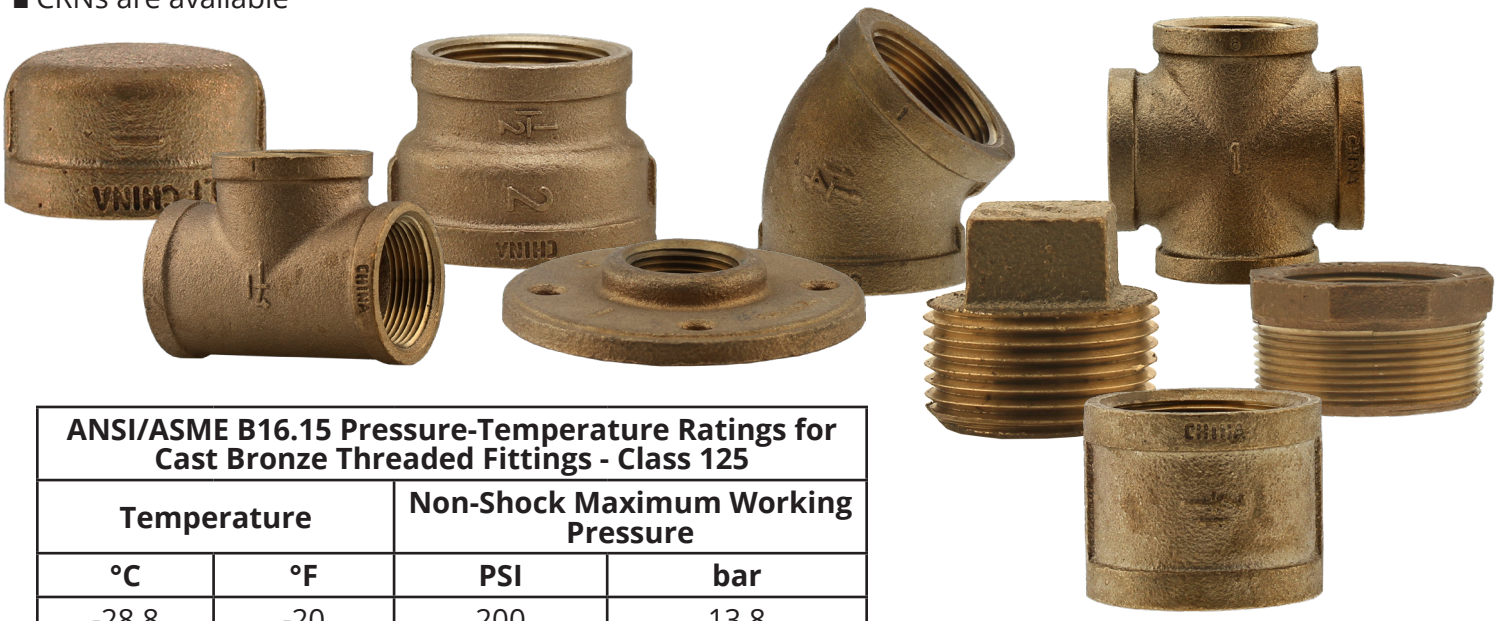

ANSI/ASME B16.15 Pressure-Temperature Ratings for Cast Bronze Threaded Fittings - Class 125			
Temperature		Non-Shock Maximum Working Pressure	
°C	°F	PSI	bar
-28.8	-20	200	13.8
65.5	150	200	13.8
93.3	200	190	13.1
121.1	250	180	12.4
148.8	300	165	11.4
176.6	350	150	10.3
204.4	400	125	8.6

1. Ratings are independent of the contained fluid and are the maximum non-shock pressures at the tabulated temperatures. Pressure for intermediate temperatures may be determined by interpolation.
2. Temperatures indicated are the material temperatures of the pressure retaining structure. It is implied that the material temperature is the same as the fluid temperature.

BOSHART INDUSTRIES

25 Whaley Avenue, PO Box 310, Milverton, ON CANADA N0K 1M0
Tel: 800-561-3164

boshart.com • blog.boshart.com

© 2020 Boshart Industries Inc. All Rights Reserved.

BII-2-BR, NLBR-0722(783BR)V2

CLASS 125 CAST BRONZE & NL BRONZE FITTINGS

Bushing - MPT x FPT

Inside Hex Head

Outside Hex Head

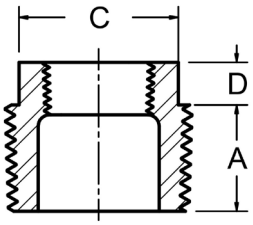

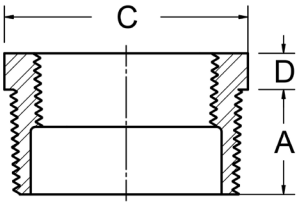

† Inside Hex Head * Octagon Head

Bronze	No Lead Bronze	Size	A		D		C	
			in	mm	in	mm	in	mm
2-BRB-0201	NLBRB-0201	1/4" x 1/8"	0.44	11	0.14	4	0.64	16
N/A	NLBRB-0301	3/8" x 1/8"	0.48	12	0.16	4	0.68	17
2-BRB-0302	NLBRB-0302	3/8" x 1/4"	0.48	12	0.16	4	0.68	17
2-BRB-0501-3	NLBRB-0501-3	1/2" x 1/8"	0.56	14	0.19	5	0.87	22
2-BRB-0502	NLBRB-0502	1/2" x 1/4"	0.56	14	0.19	5	0.87	22
2-BRB-0503	NLBRB-0503	1/2" x 3/8"	0.56	14	0.19	5	0.87	22
N/A	NLBRB-0701-3	3/4" x 1/8"	0.63	16	0.22	6	1.15	29
2-BRB-0702-3	NLBRB-0702-3	3/4" x 1/4"	0.63	16	0.22	6	1.15	29
N/A	NLBRB-0703	3/4" x 3/8"	0.63	16	0.22	6	1.15	29
2-BRB-0705	NLBRB-0705	3/4" x 1/2"	0.63	16	0.22	6	1.15	29
2-BRB-1002-3 †	NLBRB-1002-3 †	1" x 1/4"	0.75	19	0.3	8	1.42	36
N/A	NLBRB-1003-3	1" x 3/8"	0.75	19	0.3	8	1.42	36
2-BRB-1005	NLBRB-1005	1" x 1/2"	0.75	19	0.25	6	1.12	28
2-BRB-1007	NLBRB-1007	1" x 3/4"	0.75	19	0.25	6	1.12	28
N/A	NLBRB-1202-3	1-1/4" x 1/4"	0.80	20	0.34	9	1.12	28
2-BRB-1203-3 †	NLBRB-1203-3 †	1-1/4" x 3/8"	0.80	20	0.34	9	1.12	28
2-BRB-1205-3 †	NLBRB-1205-3 †	1-1/4" x 1/2"	0.80	20	0.34	9	1.34	34
2-BRB-1207	NLBRB-1207	1-1/4" x 3/4"	0.80	20	0.28	7	1.76	45
2-BRB-1210	NLBRB-1210	1-1/4" x 1"	0.80	20	0.28	7	1.76	45
N/A	NLBRB-1505-3	1-1/2" x 1/2"	0.83	21	0.37	9	1.34	34
2-BRB-1507-3 †	NLBRB-1507-3 †	1-1/2" x 3/4"	0.83	21	0.37	9	1.63	41
2-BRB-1510	NLBRB-1510	1-1/2" x 1"	0.83	21	0.31	8	2.00	51
2-BRB-1512	NLBRB-1512	1-1/2" x 1-1/4"	0.83	21	0.31	8	2.00	51
N/A	NLBRB-2005-3	2" x 1/2"	0.88	22	0.41	10	1.34	34
2-BRB-2007-3 †	NLBRB-2007-3 †	2" x 3/4"	0.88	22	0.41	10	1.63	41
2-BRB-2010-3 †	NLBRB-2010-3 †	2" x 1"	0.88	22	0.41	10	1.95	50
2-BRB-2012 *	NLBRB-2012 *	2" x 1-1/4"	0.88	22	0.34	9	2.48	63
2-BRB-2015 *	NLBRB-2015 *	2" x 1-1/2"	0.88	22	0.34	9	2.48	63

BOSHART INDUSTRIES

25 Whaley Avenue, PO Box 310, Milverton, ON CANADA N0K 1M0
Tel: 800-561-3164

boshart.com • blog.boshart.com

© 2020 Boshart Industries Inc. All Rights Reserved.

Bushing - MPT x FPT

Inside Hex Head

Outside Hex Head

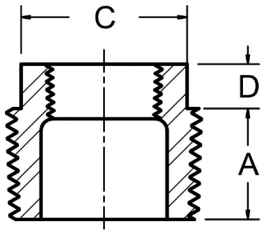

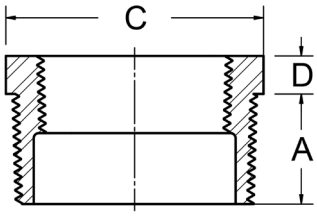

† Inside Hex Head * Octagon Head

Bronze	No Lead Bronze	Size	A		D		C	
			in	mm	in	mm	in	mm
N/A	NLBRB-2510-3	2-1/2" x 1"	1.07	27	0.44	11	1.95	50
N/A	NLBRB-2512-3	2-1/2" x 1-1/4"	1.07	27	0.44	11	2.39	61
N/A	NLBRB-2515	2-1/2" x 1-1/2"	1.07	27	0.44	11	2.68	68
2-BRB-2520 *	NLBRB-2520 *	2-1/2" x 2"	1.07	27	0.37	9	2.98	76
N/A	NLBRB-3020	3" x 2"	1.13	29	0.48	12	3.28	83
N/A	NLBRB-3025	3" x 2-1/2"	1.13	29	0.40	10	3.86	98
N/A	NLBRB-4020-3	4" x 2"	1.22	31	0.60	15	3.28	83
N/A	NLBRB-4025	4" x 2-1/2"	1.22	31	0.60	15	3.86	98
N/A	NLBRB-4030	4" x 3"	1.22	31	0.50	13	4.62	117

Cap - FPT

Bronze	No Lead Bronze	Size	P	
			in	mm
N/A	NLBRCA-01	1/8"	0.49	12
N/A	NLBRCA-02	1/4"	0.59	15
N/A	NLBRCA-03	3/8"	0.64	16
2-BRCA-05	NLBRCA-05	1/2"	0.76	19
2-BRCA-07	NLBRCA-07	3/4"	0.84	21
2-BRCA-10	NLBRCA-10	1"	0.99	25
2-BRCA-12	NLBRCA-12	1-1/4"	1.10	28
2-BRCA-15	NLBRCA-15	1-1/2"	1.15	29
2-BRCA-20	NLBRCA-20	2"	1.32	34
N/A	NLBRCA-25	2-1/2"	1.70	43
N/A	NLBRCA-30	3"	1.80	46
N/A	NLBRCA-40	4"	2.08	53

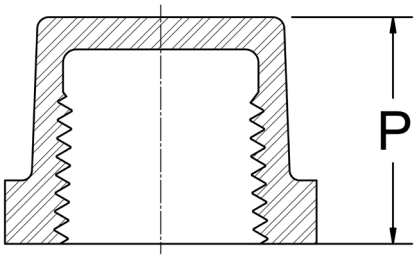

BOSHART INDUSTRIES

25 Whaley Avenue, PO Box 310, Milverton, ON CANADA N0K 1M0
Tel: 800-561-3164

boshart.com • blog.boshart.com

© 2020 Boshart Industries Inc. All Rights Reserved.

Coupling - FPT

Bronze	No Lead Bronze	Size	W	
			in	mm
N/A	NLBRC-01	1/8"	0.80	20
2-BRC-02	NLBRC-02	1/4"	0.97	25
2-BRC-03	NLBRC-03	3/8"	1.05	27
2-BRC-05	NLBRC-05	1/2"	1.29	33
2-BRC-07	NLBRC-07	3/4"	1.43	36
2-BRC-10	NLBRC-10	1"	1.68	43
2-BRC-12	NLBRC-12	1-1/4"	1.86	47
2-BRC-15	NLBRC-15	1-1/2"	1.92	49
2-BRC-20	NLBRC-20	2"	2.20	56
N/A	NLBRC-25	2-1/2"	2.88	73
N/A	NLBRC-30	3"	3.18	81
N/A	NLBRC-40	4"	3.69	94

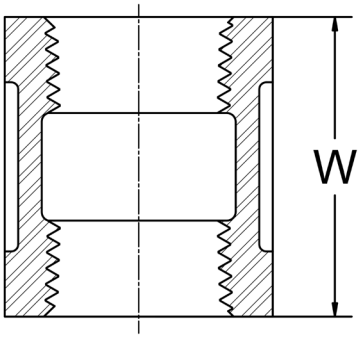

Reducing Coupling - FPT

Bronze	No Lead Bronze	Size	M	
			in	mm
N/A	NLBRRC-0201	1/4" x 1/8"	0.88	22
N/A	NLBRRC-0301	3/8" x 1/8"	0.92	23
N/A	NLBRRC-0302	3/8" x 1/4"	1.01	26
N/A	NLBRRC-0501-3	1/2" x 1/8"	1.13	29
N/A	NLBRRC-0502	1/2" x 1/4"	1.13	29
2-BRRC-0503	NLBRRC-0503	1/2" x 3/8"	1.17	30
N/A	NLBRRC-0702-3	3/4" x 1/4"	1.24	31
N/A	NLBRRC-0703	3/4" x 3/8"	1.24	31
2-BRRC-0705	NLBRRC-0705	3/4" x 1/2"	1.36	35
N/A	NLBRRC-1003-3	1" x 3/8"	1.49	38
2-BRRC-1005	NLBRRC-1005	1" x 1/2"	1.49	38
2-BRRC-1007	NLBRRC-1007	1" x 3/4"	1.56	40
N/A	NLBRRC-1205-3	1-1/4" x 1/2"	1.65	42
2-BRRC-1207	NLBRRC-1207	1-1/4" x 3/4"	1.65	42
2-BRRC-1210	NLBRRC-1210	1-1/4" x 1"	1.77	45

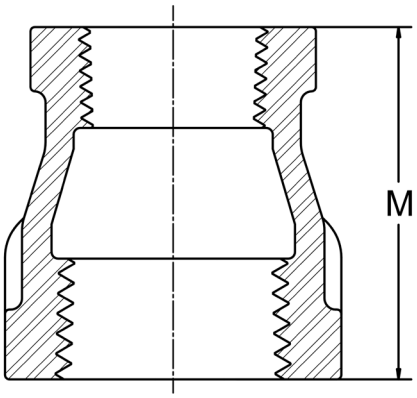

BOSHART INDUSTRIES

25 Whaley Avenue, PO Box 310, Milverton, ON CANADA N0K 1M0
Tel: 800-561-3164

boshart.com • blog.boshart.com

© 2020 Boshart Industries Inc. All Rights Reserved.

Reducing Coupling - FPT

Bronze	No Lead Bronze	Size	M	
			in	mm
N/A	NLBRRC-1505-3	1-1/2" x 1/2"	1.8	45
N/A	NLBRRC-1507-3	1-1/2" x 3/4"	1.8	45
2-BRRC-1510	NLBRRC-1510	1-1/2" x 1"	1.8	45
2-BRRC-1512	NLBRRC-1512	1-1/2" x 1-1/4"	1.89	48
N/A	NLBRRC-2005-3	2" x 1/2"	2.03	52
N/A	NLBRRC-2007-3	2" x 3/4"	2.03	52
2-BRRC-2010-3	NLBRRC-2010-3	2" x 1"	2.03	52
2-BRRC-2012	NLBRRC-2012	2" x 1-1/4"	2.03	52
2-BRRC-2015	NLBRRC-2015	2" x 1-1/2"	2.06	52
N/A	NLBRRC-2515	2-1/2" x 1-1/2"	3.25	83
N/A	NLBRRC-2520	2-1/2" x 2"	3.25	83
N/A	NLBRRC-3020	3" x 2"	3.69	94
N/A	NLBRRC-3025	3" x 2-1/2"	3.69	94
N/A	NLBRRC-4030	4" x 3"	4.38	111

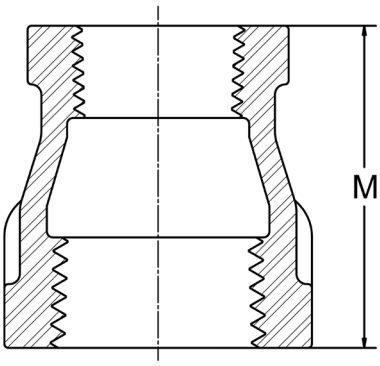

Cross - FPT

No Lead Bronze	Size	A	
		in	mm
NLBRCR-02	1/4"	0.71	18
NLBRCR-03	3/8"	0.82	21
NLBRCR-05	1/2"	1.01	26
NLBRCR-07	3/4"	1.18	30
NLBRCR-10	1"	1.43	36
NLBRCR-12	1-1/4"	1.69	43
NLBRCR-15	1-1/2"	1.84	47
NLBRCR-20	2"	2.12	54

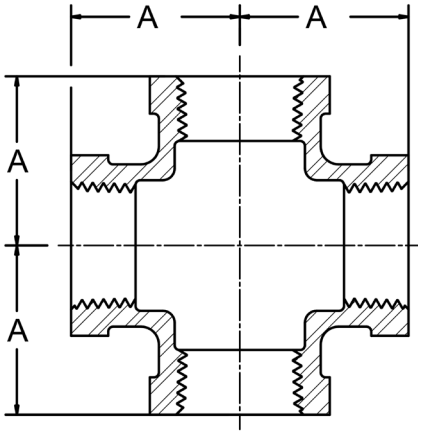

BOSHART INDUSTRIES

25 Whaley Avenue, PO Box 310, Milverton, ON CANADA N0K 1M0
Tel: 800-561-3164

boshart.com • blog.boshart.com

© 2020 Boshart Industries Inc. All Rights Reserved.

45° Elbow - FPT

Bronze	No Lead Bronze	Size	C	
			in	mm
N/A	NLBRE4-01	1/8"	0.42	11
N/A	NLBRE4-02	1/4"	0.56	14
N/A	NLBRE4-03	3/8"	0.63	16
N/A	NLBRE4-05	1/2"	0.78	20
2-BRE4-07	NLBRE4-07	3/4"	0.89	23
2-BRE4-10	NLBRE4-10	1"	1.06	27
N/A	NLBRE4-12	1-1/4"	1.22	31
N/A	NLBRE4-15	1-1/2"	1.30	33
2-BRE4-20	NLBRE4-20	2"	1.45	37
N/A	NLBRE4-25	2-1/2"	1.95	50
N/A	NLBRE4-30	3"	2.17	55
N/A	NLBRE4-40	4"	2.61	66

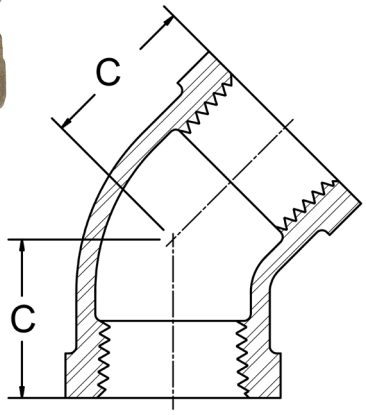

90° Elbow - FPT

Bronze	No Lead Bronze	Size	A	
			in	mm
N/A	NLBRE-01	1/8"	0.54	14
2-BRE-02	NLBRE-02	1/4"	0.71	18
2-BRE-03	NLBRE-03	3/8"	0.82	21
2-BRE-05	NLBRE-05	1/2"	1.01	26
2-BRE-07	NLBRE-07	3/4"	1.18	30
2-BRE-10	NLBRE-10	1"	1.43	36
2-BRE-12	NLBRE-12	1-1/4"	1.69	43
2-BRE-15	NLBRE-15	1-1/2"	1.84	47
2-BRE-20	NLBRE-20	2"	2.12	54
N/A	NLBRE-25	2-1/2"	2.70	69
N/A	NLBRE-30	3"	3.08	78
N/A	NLBRE-40	4"	3.79	96

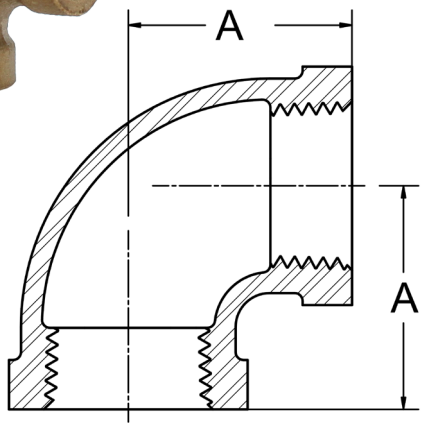

BOSHART INDUSTRIES

25 Whaley Avenue, PO Box 310, Milverton, ON CANADA N0K 1M0
Tel: 800-561-3164

boshart.com • blog.boshart.com

© 2020 Boshart Industries Inc. All Rights Reserved.

Reducing 90° Elbow - FPT

Bronze	No Lead Bronze	Size	X		Z	
			in	mm	in	mm
N/A	NLBRRE-0301	3/8" x 1/8"	0.75	19	0.78	20
N/A	NLBRRE-0502	1/2" x 1/4"	0.97	25	0.98	25
N/A	NLBRRE-0503	1/2" x 3/8"	0.9	23	0.93	24
N/A	NLBRRE-0703	3/4" x 3/8"	1.12	28	1.13	28
2-BRRE-0705	NLBRRE-0705	3/4" x 1/2"	1.08	27	1.11	28
N/A	NLBRRE-1005	1" x 1/2"	1.2	30	1.24	31
2-BRRE-1007	NLBRRE-1007	1" x 3/4"	1.3	33	1.31	33
N/A	NLBRRE-1205	1-1/4" x 1/2"	1.34	34	1.53	39
N/A	NLBRRE-1207	1-1/4" x 3/4"	1.39	35	1.48	38
2-BRRE-1210	NLBRRE-1210	1-1/4" x 1"	1.52	39	1.6	41
N/A	NLBRRE-1507	1-1/2" x 3/4"	1.52	39	1.72	44
N/A	NLBRRE-1510	1-1/2" x 1"	1.55	39	1.72	44
N/A	NLBRRE-1512	1-1/2" x 1-1/4"	1.72	44	1.81	46
N/A	NLBRRE-2005	2" x 1/2"	1.56	40	1.9	48
N/A	NLBRRE-2007	2" x 3/4"	1.68	43	1.9	48
N/A	NLBRRE-2010	2" x 1"	1.73	44	2.02	51
N/A	NLBRRE-2012	2" x 1-1/4"	1.9	48	2.1	53
N/A	NLBRRE-2015	2" x 1-1/2"	1.89	48	2.07	53
N/A	NLBRRE-2515	2-1/2" x 1-1/2"	2.16	55	2.51	64
N/A	NLBRRE-2520	2-1/2" x 2"	2.39	61	2.6	66
N/A	NLBRRE-3020	3" x 2"	2.52	64	2.89	73

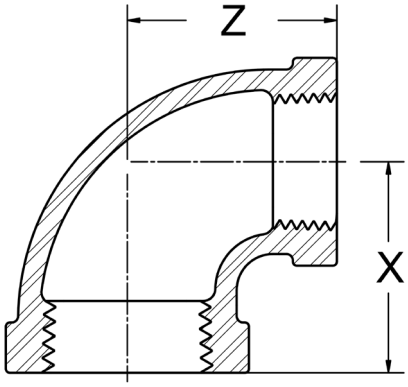

45° Street Elbow - MPT x FPT

Bronze	No Lead Bronze	Size	C		K	
			in	mm	in	mm
2-BRSE4-01	NLBRSE4-01	1/8"	0.42	11	0.78	20
N/A	NLBRSE4-02	1/4"	0.56	14	0.88	22
N/A	NLBRSE4-03	3/8"	0.63	16	0.92	23
N/A	NLBRSE4-05	1/2"	0.78	20	1.06	27
N/A	NLBRSE4-07	3/4"	0.89	23	1.23	31
N/A	NLBRSE4-10	1"	1.06	27	1.40	36
N/A	NLBRSE4-12	1-1/4"	1.22	31	1.64	42
N/A	NLBRSE4-15	1-1/2"	1.30	33	1.80	46
N/A	NLBRSE4-20	2"	1.45	37	2.14	54

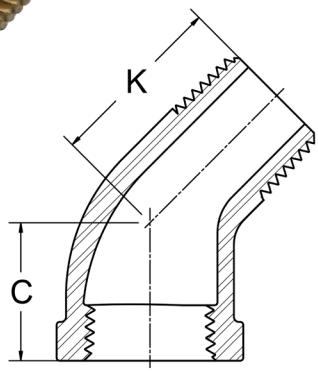

BOSHART INDUSTRIES

25 Whaley Avenue, PO Box 310, Milverton, ON CANADA N0K 1M0
Tel: 800-561-3164

boshart.com • blog.boshart.com

© 2020 Boshart Industries Inc. All Rights Reserved.

90° Street Elbow - MPT x FPT

Bronze	No Lead Bronze	Size	A		J	
			in	mm	in	mm
N/A	NLBRSE-01	1/8"	0.54	14	0.92	23
2-BRSE-02	NLBRSE-02	1/4"	0.71	18	1.11	28
N/A	NLBRSE-03	3/8"	0.82	21	1.24	31
2-BRSE-05	NLBRSE-05	1/2"	1.01	26	1.48	38
2-BRSE-07	NLBRSE-07	3/4"	1.18	30	1.65	42
2-BRSE-10	NLBRSE-10	1"	1.43	36	1.98	50
2-BRSE-12	NLBRSE-12	1-1/4"	1.69	43	2.24	57
2-BRSE-15	NLBRSE-15	1-1/2"	1.84	47	2.46	62
2-BRSE-20	NLBRSE-20	2"	2.12	54	2.88	73
N/A	NLBRSE-25	2-1/2"	2.70	68.6	3.86	98.0
N/A	NLBRSE-30	3"	3.08	78.2	4.51	114.6
N/A	NLBRSE-40	4"	3.79	96.3	5.69	144.5

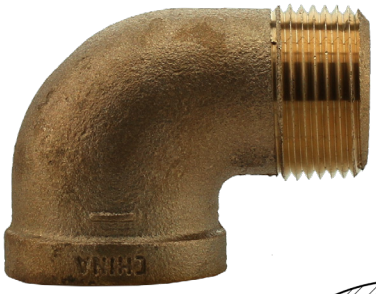

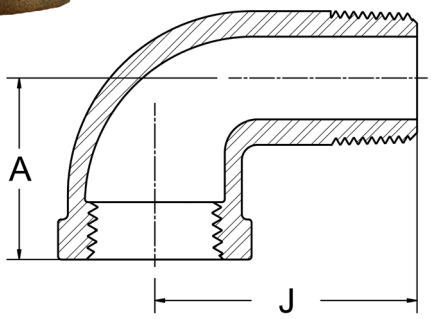

Tee - FPT

Bronze	No Lead Bronze	Size	A	
			in	mm
N/A	NLBRT-01	1/8"	0.54	14
2-BRT-02	NLBRT-02	1/4"	0.71	18
N/A	NLBRT-03	3/8"	0.82	21
2-BRT-05	NLBRT-05	1/2"	1.01	26
2-BRT-07	NLBRT-07	3/4"	1.18	30
2-BRT-10	NLBRT-10	1"	1.43	36
2-BRT-12	NLBRT-12	1-1/4"	1.69	43
2-BRT-15	NLBRT-15	1-1/2"	1.84	47
2-BRT-20	NLBRT-20	2"	2.12	54
N/A	NLBRT-25	2-1/2"	2.70	69
N/A	NLBRT-30	3"	3.08	78
N/A	NLBRT-40	4"	3.79	96

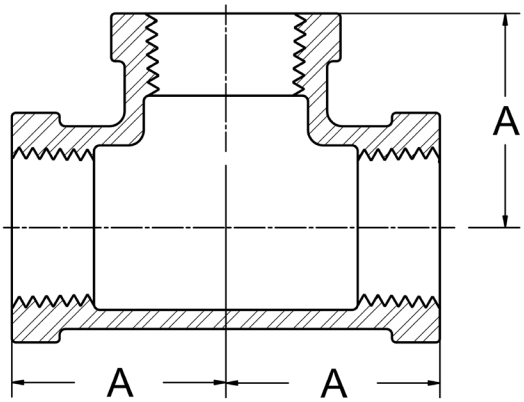

BOSHART INDUSTRIES

25 Whaley Avenue, PO Box 310, Milverton, ON CANADA N0K 1M0
Tel: 800-561-3164

boshart.com • blog.boshart.com

© 2020 Boshart Industries Inc. All Rights Reserved.

Reducing Tee - FPT

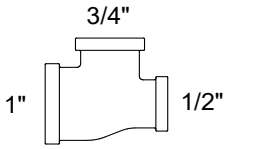

RT-100507
1" X 1/2" X 3/4"
(Part number sequence)

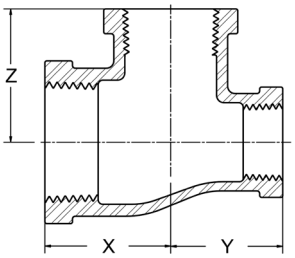

Bronze	No Lead Bronze	Size	X		Y		Z	
			in	mm	in	mm	in	mm
N/A	NLBRRT-020201	1/4" x 1/4" x 1/8"	0.65	17	0.65	17	0.6	15
N/A	NLBRRT-050502	1/2" x 1/2" x 1/4"	0.87	22	0.87	22	0.87	22
N/A	NLBRRT-050503	1/2" x 1/2" x 3/8"	0.93	24	0.93	24	0.9	23
N/A	NLBRRT-050507-2	1/2" x 1/2" x 3/4"	1.11	28	1.11	28	1.08	27
N/A	NLBRRT-070505-2	3/4" x 1/2" x 1/2"	1.08	27	1.01	26	1.11	28
N/A	NLBRRT-070507	3/4" x 1/2" x 3/4"	1.18	30	1.11	28	1.18	30
N/A	NLBRRT-070702	3/4" x 3/4" x 1/4"	1.00	25	1.00	25	1.00	25
N/A	NLBRRT-070703	3/4" x 3/4" x 3/8"	1.00	25	1.00	25	1.00	25
2-BRRT-070705	NLBRRT-070705	3/4" x 3/4" x 1/2"	1.08	27	1.08	27	1.11	28
2-BRRT-070710-2	NLBRRT-070710-2	3/4" x 3/4" x 1"	1.31	33	1.31	33	1.3	33
N/A	NLBRRT-100505-2	1" x 1/2" x 1/2"	1.3	33	1.11	28	1.31	33
N/A	NLBRRT-100507-2	1" x 1/2" x 3/4"	1.3	33	1.11	28	1.31	33
N/A	NLBRRT-100510	1" x 1/2" x 1"	1.43	36	1.24	31	1.43	36
N/A	NLBRRT-100707-2	1" x 3/4" x 3/4"	1.3	33	1.18	30	1.31	33
N/A	NLBRRT-100710	1" x 3/4" x 1"	1.43	36	1.31	33	1.43	36
N/A	NLBRRT-101002	1" x 1" x 1/4"	1.12	28	1.12	28	1.13	29
N/A	NLBRRT-101003	1" x 1" x 3/8"	1.12	28	1.12	28	1.13	29
2-BRRT-101005	NLBRRT-101005	1" x 1" x 1/2"	1.2	30	1.2	30	1.24	31
2-BRRT-101007	NLBRRT-101007	1" x 1" x 3/4"	1.3	33	1.3	33	1.31	33
N/A	NLBRRT-121205	1-1/4" x 1-1/4" x 1/2"	1.29	33	1.29	33	1.41	36
N/A	NLBRRT-121207	1-1/4" x 1-1/4" x 3/4"	1.39	35	1.39	35	1.48	38
N/A	NLBRRT-121210	1-1/4" x 1-1/4" x 1"	1.52	39	1.52	39	1.6	41
N/A	NLBRRT-151505	1-1/2" x 1-1/2" x 1/2"	1.32	34	1.32	34	1.53	39
N/A	NLBRRT-151507	1-1/2" x 1-1/2" x 3/4"	1.42	36	1.42	36	1.6	41
N/A	NLBRRT-151510	1-1/2" x 1-1/2" x 1"	1.55	39	1.55	39	1.72	44
N/A	NLBRRT-151512	1-1/2" x 1-1/2" x 1-1/4"	1.72	44	1.72	44	1.81	46
N/A	NLBRRT-202005	2" x 2" x 1/2"	1.47	37	1.47	37	1.84	47
2-BRRT-202007	NLBRRT-202007	2" x 2" x 3/4"	1.47	37	1.47	37	1.84	47
2-BRRT-202010	NLBRRT-202010	2" x 2" x 1"	1.59	40	1.59	40	1.95	50
2-BRRT-202012	NLBRRT-202012	2" x 2" x 1-1/4"	1.77	45	1.77	45	2.04	52
N/A	NLBRRT-202015	2" x 2" x 1-1/2"	1.89	48	1.89	48	2.07	53

BOSHART INDUSTRIES
25 Whaley Avenue, PO Box 310, Milverton, ON CANADA N0K 1M0
Tel: 800-561-3164
boshart.com • blog.boshart.com

© 2020 Boshart Industries Inc. All Rights Reserved.

CLASS 125 CAST BRONZE & NL BRONZE FITTINGS

Floor Flange - FPT

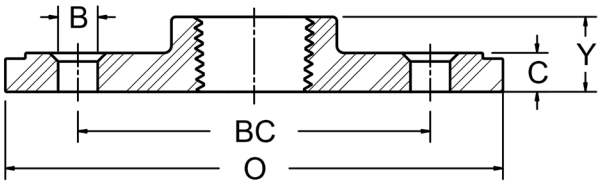

Bronze	Size	O		BC		C		Y		B		No. of Bolt Holes
		in	mm	in	mm	in	mm	in	mm	in	mm	
2-BRFF-05	1/2"	3.50	88.9	2.50	63.5	0.28	7.2	0.56	14.3	0.25	6.4	4
2-BRFF-07	3/4"	3.50	88.9	2.50	63.5	0.31	7.9	0.63	15.9	0.25	6.4	4
2-BRFF-10	1"	4.02	102.0	3.00	76.2	0.34	8.7	0.69	17.5	0.25	6.4	4
2-BRFF-12	1-1/4"	4.02	102.0	3.00	76.2	0.34	8.7	0.75	19.1	0.25	6.4	4
2-BRFF-15	1-1/2"	4.49	114.0	3.50	88.9	0.37	9.5	0.87	22.2	0.31	8	4
2-BRFF-20	2"	5.51	140.0	4.25	108.0	0.41	10.3	1.00	25.4	0.31	8	4

Locknut - FPT

Bronze	Size	A		C	
		in	mm	in	mm
2-BRLN-02	1/4"	0.25	6.4	0.84	21.3
2-BRLN-03	3/8"	0.28	7.1	1.00	25.4
2-BRLN-05	1/2"	0.31	7.9	1.18	30
2-BRLN-07	3/4"	0.34	8.6	1.43	36.3
2-BRLN-10	1"	0.38	9.7	1.75	44.5
2-BRLN-12	1-1/4"	0.42	10.7	2.10	53.3
2-BRLN-15	1-1/2"	0.47	11.9	2.35	59.7
2-BRLN-20	2"	0.53	13.5	2.88	73.2

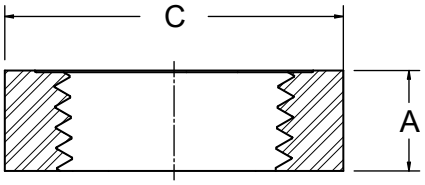

Square Head Plug - MPT

Bronze	No Lead Bronze	Size	A		B		C	
			in	mm	in	mm	in	mm
2-BRP-05	NLBRP-05	1/2"	0.54	14.0	0.38	10.0	0.56	14.3
2-BRP-07	NLBRP-07	3/4"	0.55	14.0	0.44	11.0	0.63	15.8
2-BRP-10	NLBRP-10	1"	0.69	18.0	0.50	13.0	0.81	20.6
2-BRP-12	NLBRP-12	1-1/4"	0.71	18.0	0.56	14.0	0.94	23.8
2-BRP-15	NLBRP-15	1-1/2"	0.73	19.0	0.62	16.0	1.13	28.5
2-BRP-20	NLBRP-20	2"	0.76	19.0	0.68	17.0	1.31	33.3
N/A	NLBRP-25	2-1/2"	1.07	27.0	0.74	19.0	1.5	38.1
N/A	NLBRP-30	3"	1.13	29.0	0.80	20.0	1.69	42.8
N/A	NLBRP-40	4"	1.22	31.0	0.92	23.0	2.25	57.1

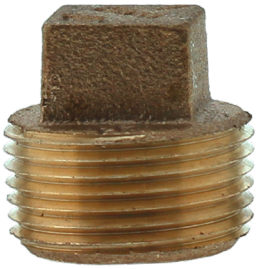

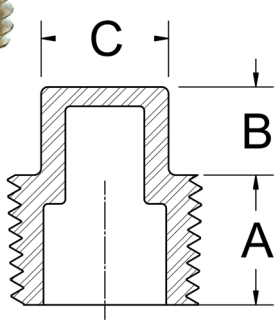

BOSHART INDUSTRIES
25 Whaley Avenue, PO Box 310, Milverton, ON CANADA N0K 1M0
Tel: 800-561-3164
boshart.com • blog.boshart.com

© 2020 Boshart Industries Inc. All Rights Reserved.

BII-2-BR, NLBR-0722(783BR)V2

Solid Square Head Plug - MPT

Bronze	No Lead Bronze	Size	A		B		C	
			in	mm	in	mm	in	mm
N/A	NLBRP-01	1/8"	0.27	7.0	0.24	6.0	0.28	7.1
N/A	NLBRP-02	1/4"	0.41	10.0	0.28	7.0	0.38	9.5
N/A	NLBRP-03	3/8"	0.41	10.0	0.31	8.0	0.44	11.1
2-BRPS-05	NLBRPS-05	1/2"	0.54	14.0	0.38	10.0	0.56	14.3
2-BRPS-07	NLBRPS-07	3/4"	0.55	14.0	0.44	11.0	0.63	15.8
2-BRPS-10	NLBRPS-10	1"	0.69	18.0	0.50	13.0	0.81	20.6
N/A	NLBRPS-12	1-1/4"	0.71	18.0	0.56	14.0	0.94	23.8
N/A	NLBRPS-15	1-1/2"	0.73	19.0	0.62	16.0	1.13	28.5
N/A	NLBRPS-20	2"	0.76	19.0	0.68	17.0	1.31	33.3

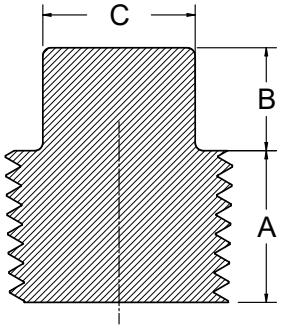

Union - FPT

Bronze	No Lead Bronze	Size	B		C	
			in	mm	in	mm
N/A	NLBRU-01	1/8"	0.93	23.5	1.26	32
2-BRU-02	NLBRU-02	1/4"	1.1	28	1.44	36.5
N/A	NLBRU-03	3/8"	1.26	32	1.61	41
2-BRU-05	NLBRU-05	1/2"	1.45	37	1.72	43.5
2-BRU-07	NLBRU-07	3/4"	1.71	43.5	1.94	49.5
2-BRU-10	NLBRU-10	1"	2.07	52.5	2.06	52.5
2-BRU-12	NLBRU-12	1-1/4"	2.5	63.5	2.11	53.5
2-BRU-15	NLBRU-15	1-1/2"	2.82	71.5	2.41	61
2-BRU-20	NLBRU-20	2"	3.41	86.5	2.75	70
N/A	NLBRU-25	2-1/2"	4.12	104.5	3.22	82
N/A	NLBRU-30	3"	4.75	120.5	3.5	89
N/A	NLBRU-40	4"	6	152.5	3.85	98

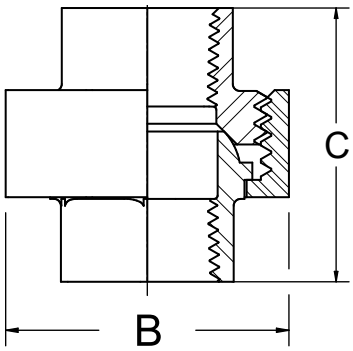

Metal to metal sealing

BOSHART INDUSTRIES

25 Whaley Avenue, PO Box 310, Milverton, ON CANADA N0K 1M0
Tel: 800-561-3164

boshart.com • blog.boshart.com

© 2020 Boshart Industries Inc. All Rights Reserved.

CLASS 150 BRONZE & NL BRONZE COMPANION FLANGES

Companion Flange - FPT

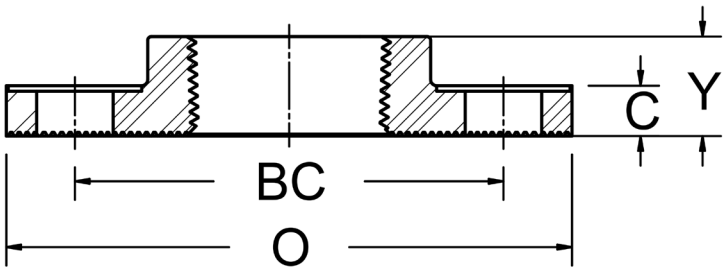

Bronze	No Lead Bronze	Size	O		BC		C		Y		No. of Bolt holes	Diameter of Bolt holes
			in	mm	in	mm	in	mm	in	mm		
2-BRCF-05	NLBRCF-05	1/2"	3.50	88.9	2.38	60.5	0.31	7.9	0.59	15.0	4	0.62
2-BRCF-07	NLBRCF-07	3/4"	3.88	98.6	2.75	69.9	0.34	8.6	0.62	15.7	4	0.62
2-BRCF-10	NLBRCF-10	1"	4.25	108.0	3.12	79.2	0.38	9.7	0.69	17.5	4	0.62
2-BRCF-12	NLBRCF-12	1-1/4"	4.62	117.3	3.50	88.9	0.41	10.4	0.81	20.6	4	0.62
2-BRCF-15	NLBRCF-15	1-1/2"	5.00	127.0	3.88	98.6	0.44	11.2	0.88	22.4	4	0.62
2-BRCF-20	NLBRCF-20	2"	6.00	152.4	4.75	120.7	0.50	12.7	1.00	25.4	4	0.75
2-BRCF-25	NLBRCF-25	2-1/2"	7.00	177.8	5.50	139.7	0.56	14.2	1.12	28.4	4	0.75
2-BRCF-30	NLBRCF-30	3"	7.50	190.5	6.00	152.4	0.62	15.7	1.19	30.2	4	0.75
2-BRCF-40	NLBRCF-40	4"	9.00	228.6	7.50	190.5	0.69	17.5	1.31	33.3	8	0.75

ANSI/ASME B16.24 Pressure-Temperature Ratings for Alloys C83600 - Class 150			
Temperature		Working Pressure	
°C	°F	PSI	bar
-28.8 to 65.5	-20 to 150	225	15.5
79.4	175	220	15.1
93.3	200	210	14.4
107.2	225	205	14.1
121.1	250	195	13.4
135.0	275	190	13.1
148.9	300	180	12.4
176.7	350	165	11.3
207.8	406	150	10.3
232.2	450	135 (1)	9.30

(1) Some codes limit the rating temperature of the indicated material to 406 °F.

Pressure and temperature rating charts are to be used as a guide only.

For more information on installation, adjustment, repair & operation, visit Boshart Knowledge Base at

SUPPORT.BOSHART.COM

BOSHART INDUSTRIES

25 Whaley Avenue, PO Box 310, Milverton, ON CANADA N0K 1M0
Tel: 800-561-3164

boshart.com • blog.boshart.com

© 2020 Boshart Industries Inc. All Rights Reserved.