PENTAIR

EASYTOUCH® PL4/PSL4 CONTROL SYSTEMS

FOR POOL AND SPA

INSTALLATION GUIDE

IMPORTANT SAFETY INSTRUCTIONS
READ AND FOLLOW ALL INSTRUCTIONS
SAVE THESE INSTRUCTIONS

Eco™ Select
Efficiency • Conservation
PENTAIR

Customer Service / Technical Support USA

Phone: (800) 831-7133

8 A.M. to 7:30 P.M. (ET)

Fax: (805) 284-4151

Web sites

visit www.pentairpool.com and staritepool.com

P/N 522460 Rev. B 1/2015

Contents

IMPORTANT WARNING AND SAFETY INSTRUCTIONS ..... iii-vi

General Installation Information v

Introduction 1

EasyTouch PL4/PSL4 Control System Power Center Installation Overview 3
Preparing the Power Center Enclosure 5
Mounting the Power Center 6
Installing Conduit and Conductors to the Power Center 7
Connecting AC Power to the Power Center 7
Electrical Wiring High Voltage Connections 8
Accessing the Circuit Board and Electronics 10
Connecting the Relays 11
Installing Valve Actuators 12
Adjusting the valve position 12
Installing and Connecting Temperature Sensors 13
Water Temperature Sensor 13
Ambient Air Temperature Sensor (for freeze protection) 13
Solar Temperature Sensor (Optional) 15
Connecting a Standard Gas Heater 16
Wiring Pentair UltraTemp Heat Pump 17
Wiring Pentair IntelliFlo Pumps 17
Connecting IntelliChlor (SC) RS-485 Communication Cable to the Power Center 18
Wiring IntelliChem Controller to the Power Center 18
Wiring IntelliChlor (SCG) Power Center AC Power Cable to the Filter Pump Relay 19
Rewiring the EasyTouch Control System Transformer for 240 VAC 20

Accessories: 34

EasyTouch PL4/PSL4 Control System Indoor Control Panel Installation 21
EasyTouch PL4/PSL4 Control System QuickTouch II Wireless Controller Installation 25
EasyTouch PL4/PSL4 Control System Outdoor Control Panel Installation 28

EasyTouch PL4/PSL4 Control System Circuit Board Connections 30
EasyTouch PL4/PSL4 Control System Wiring Diagram 31

System Start-Up 32
Check Electronics 32
System Test 32
Testing the auxiliary relays 32
Solar System Installation 33
Solar System Start-Up 33
Replacement Parts List 34
Plumbing Requirements 35
Equipment Location 36
Glossary 38

IMPORTANT WARNING AND SAFETY INSTRUCTIONS

READ AND FOLLOW ALL WARNING AND SAFETY INSTRUCTIONS

DANGER **SERIOUS BODILY INJURY OR DEATH CAN RESULT IF THIS PRODUCT (UNIT) IS NOT INSTALLED AND USED CORRECTLY.**

DANGER **INSTALLERS, POOL OPERATORS AND POOL OWNERS MUST READ THESE WARNINGS AND ALL INSTRUCTIONS BEFORE USING THIS PRODUCT. This Guide provides installation and operation instructions for the product. Consult Pentair Water Pool and Spa, Inc. ("Pentair") with any questions regarding this product.**

WARNING This product is intended for use in swimming pool applications only.

WARNING Most states and local codes regulate the construction, installation, and operation of public pools and spas, and the construction of residential pools and spas. It is important to comply with these codes, many of which directly regulate the installation and use of this product. Consult your local building and health codes for more information.

IMPORTANT NOTICE - Attention Installer: This Installation Guide ("Guide") contains important information about the installation, operation and safe use of this product. This Guide should be given to the owner and/or operator of this equipment.

Attention User: This Guide contains important information that will help you in operating and maintaining this product. Please retain it for future reference.

WARNING Before installing this product, read and follow all safety warning notices and instructions which are included. Failure to follow safety warnings and instructions can result in severe injury, death, or property damage. Call (800) 831-7133 for additional free copies of these instructions.

This product is designed and manufactured for safe and reliable service when installed, operated and maintained according to the information and installation codes referred to in this Guide.

This is a safety alert symbol. When you see this symbol in this manual or on the product, look for one of the following signal words; DANGER, WARNING, CAUTION and NOTICE and comply with the information. Be alert to the potential hazard. Ensure to read and comply with all of the warnings and cautions in this manual.

Risk of Electrical Shock or Electrocution!

- Always disconnect power at the circuit breaker before servicing the load center
- Improper installation can create an electrical shock hazard that can result in death or serious injury.

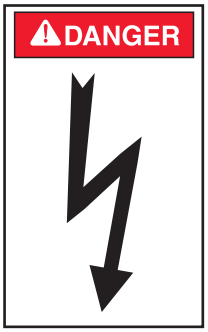

This product must be installed by a licensed or certified electrician or a qualified pool professional in accordance with the current National Electrical Code (NEC), NFPA 70 or the Canadian Electrical Code (CEC), CSA C22.1. All applicable local installation codes and ordinances must also be adhered to. Improper installation will create an electrical hazard which could result in death or serious injury to pool users, installers or others due to electrical shock, and may also cause damage to property. Always disconnect the power to the pool light at the circuit breaker before servicing the light. Failure to do so could result in death or serious injury to serviceman, pool users or others due to electrical shock.

IMPORTANT WARNING AND SAFETY INSTRUCTIONS

DANGER

Water temperature in excess of 100° F (37.7° C) may be hazardous to your health. Prolonged immersion in hot water may induce hyperthermia. Hyperthermia occurs when the internal temperature of the body reaches a level several degrees above normal body temperature of 98.6° F (37° C.). Effects of hyperthermia include: (1) Unawareness of impending danger. (2) Failure to perceive heat. (3) Failure to recognize the need to leave the spa. (4) Physical inability to exit the spa. (5) Fetal damage in pregnant women. (6) Unconsciousness resulting in danger of drowning. The use of alcohol, drugs, or medication can greatly increase the risk of fatal hyperthermia in hot tubs and spas.

WARNING A pool or spa pump must be installed by a qualified pool and spa service professional in accordance with the current National Electrical Code and all applicable local codes and ordinances. Improper installation may create an electrical hazard which could result in death or serious injury to pool users, installers, or others due to electrical shock, and may also cause damage to property.

WARNING The use of alcohol, drugs, or medication can greatly increase the risk of fatal hyperthermia in hot tubs and spas. This product is intended to control heaters with built-in high limit circuits **ONLY**. Failure to do so may cause property damage or personal injury.

WARNING Do not use this product to control an automatic pool cover. Swimmers may become entrapped underneath the cover.

WARNING For units intended for use in other than single-family dwellings, a clearly labeled emergency switch shall be provided as part of the installation. The switch shall be readily accessible to the occupants and shall be installed at least five (5) feet (1.52 m) away, adjacent to, and within sight of, the unit.

WARNING Except for listed spa-side remote controls, install a minimum of five (5) feet (1.52 m) from the inside wall of the pool and spa.

WARNING The electrical supply for this product must include a suitably rated switch or circuit breaker to open all ungrounded supply conductors to comply with the current National Electrical Code (NEC), NFPA 70 or the Canadian Electrical Code (CEC), CSA C22.1. All applicable local installation codes and ordinances must also be adhered to. The disconnecting means must be readily accessible to the tub occupant but installed at least five 5ft. (1.52 m), (Canada 3 m (9.75 ft) from the inside wall of the pool.

WARNING **Use only copper supply conductor's rated for 60C/75C sized based on ampacity to support all loads (refer to NEC tables). Load center input supply to be protected by 150 Amp Maximum, 240 VAC Main Circuit Breaker.**

For information about the Virginia Graeme Baker Pool and Spa Safety Act, contact the Consumer Product Safety Commission at (301) 504-7908 or visit www.cpsc.gov.

NOTE: Always turn off all power to the pool pump before installing the cover or working on any suction outlet.

Two Speed Pump Controls Notice (Title 20 Compliance) - Please read the following important Safety Instructions - When using two-speed pumps manufactured on or after January 1, 2008, the pump's default circulation speed MUST be set to the LOWEST SPEED, with a high speed override capability being for a temporary period not to exceed one normal cycle, or two hours, whichever is less.

IMPORTANT WARNING AND SAFETY INSTRUCTIONS

FCC Standard - 47 CFR Part 15, Subpart C (Section 15.247). This version is limited to chapter 1 to chapter 11 by specified firmware controlled in the U.S.A.

Instruction to user - This equipment has been tested and found to comply with the limits for a Class B digital device, pursuant to Part 15 of the FCC Rules. These limits are designed to provide reasonable protection against harmful interference in a residential installation. This equipment generates, uses and can radiate radio frequency energy and, if not installed and used in accordance with the instructions, may cause harmful interference to radio communications. However, there is no guarantee that interference will not occur in a particular installation. If this equipment does cause harmful interference to radio or television reception, which can be determined by turning the equipment off and on, the user is encouraged to try to correct the interference by one or more of the following measures:

- Reorient or relocate the receiving antenna.
- Increase the separation between the equipment and receiver.
- Connect the equipment into an outlet on a circuit different from that to which the receiver is connected.
- Consult the dealer or an experienced radio/TV technician for help.

Note: In order to maintain compliance with FCC regulations, shielded cables must be used with this equipment. Operation with non-approved equipment or unshielded cables is likely to result in interference to radio and TV reception. The user is cautioned that changes and modifications made to the equipment without the approval of the manufacturer could void the user's authority to operate this equipment.

Canada - Industry Canada (IC) Regulatory Notice: - This device complies with RSS210 of Industry Canada. (1999).

Under Industry Canada regulations, this radio transmitter may only operate using an antenna of a type and maximum (or lesser) gain approved for the transmitter by Industry Canada. To reduce potential radio interference to other users, the antenna type and its gain should be so chosen that the equivalent isotropically radiated power (e.i.r.p.) is not more than that necessary for successful communication. This device complies with Industry Canada licence-exempt RSS standard(s). Operation is subject to the following two conditions: (1) this device may not cause interference, and (2) this device must accept any interference, including interference that may cause undesired operation of the device.

Conformément à la réglementation d'Industrie Canada, le présent émetteur radio peut fonctionner avec une antenne d'un type et d'un gain maximal (ou inférieur) approuvé pour l'émetteur par Industrie Canada. Dans le but de réduire les risques de brouillage radioélectrique à l'intention des autres utilisateurs, il faut choisir le type d'antenne et son gain de sorte que la puissance isotrope rayonnée équivalente (p.i.r.e.) ne dépasse pas l'intensité nécessaire à l'établissement d'une communication satisfaisante. Le présent appareil est conforme aux CNR d'Industrie Canada applicables aux appareils radio exempts de licence. L'exploitation est autorisée aux deux conditions suivantes : (1) l'appareil ne doit pas produire de brouillage, et (2) l'utilisateur de l'appareil doit accepter tout brouillage radioélectrique subi, même si le brouillage est susceptible d'en compromettre le fonctionnement.

RF Exposure Requirements: The antenna(s) used for this device must be installed to provide a separation distance of at least 7.0 inches (20 cm) from all persons and must not be co-located or operating in conjunction with any other antenna or transmitter.

L'antenne (s) utilisé pour cet appareil doit être installé pour fournir une distance de séparation d'au moins (20 cm) à partir de toutes les personnes et ne doit pas être co-localisés ou fonctionner en conjonction avec une autre antenne ou un autre émetteur.

IMPORTANT WARNING AND SAFETY INSTRUCTIONS

General Installation Information

1. All work must be performed by a licensed electrician, and must conform to all national, state, and local codes.
2. Install to provide drainage of compartment for electrical components.
3. If this system is used to control underwater lighting fixtures, a ground-fault interrupter (GFCI) must be provided for these fixtures. Conductors on the load side of the ground-fault circuit-interrupter shall **not** occupy conduit, junction boxes or enclosures containing other conductors unless such conductors are also protected by a ground-fault circuit-interrupter. Refer to local codes for details.
4. A terminal bar stamped ⏚ is located inside the supply terminal box. To reduce the risk of electric shock, this terminal must be connected to the grounding means provided in the electric supply service panel with a continuous copper wire equivalent in size to the circuit conductors supplying this equipment (no smaller than 12 AWG or 3.3 mm). The bonding lug(s) provided on this unit are intended to connect a minimum of one No. 8 AWG for US installation and two No. 6 AWG for Canadian installations solid copper conductor between this unit and any metal equipment, metal enclosures or electrical equipment, metal water pipe, or conduit within 5 feet (1.52 m) of the unit.
5. The electrical supply for this product must include a suitably rated switch or circuit breaker to open all ungrounded supply conductors to comply with in accordance with the current National Electrical Code (NEC), NFPA 70 or the Canadian Electrical Code (CEC), CSA C22.1. All applicable local installation codes and ordinances must also be adhered to. The disconnecting means must be readily accessible to the tub occupant but installed at least 10 ft. (3.05 m) from the inside wall of the pool.
6. **GAS HEATER:** This automation control system is designed to supply high voltage (120 VAC / 240 VAC) to a gas heater and override the thermostat in the heater's control circuit. This automation control system is intended to control gas heaters with a high temperature limit switch(s) safety circuit.

IMPORTANT WARNING AND SAFETY INSTRUCTIONS

For Installation of Electrical Controls at Equipment Pad (ON/OFF Switches, Timers and Automation Power Center)

⚠ CAUTION

Install all electrical controls at equipment pad, such as on/off switches, timers, and control systems, etc. to allow the operation (start-up, shut-down, or servicing) of any pump or filter so the user does not place any portion of his/her body over or near the pump strainer lid, filter lid or valve closures. This installation should allow the user enough space to stand clear of the filter and pump during system start-up, shut down or servicing of the system filter.

CAUTION! INSTALL POWER CENTER TO ALLOW USER ENOUGH SPACE TO STAND CLEAR OF PUMP AND FILTER WHEN SERVICING.

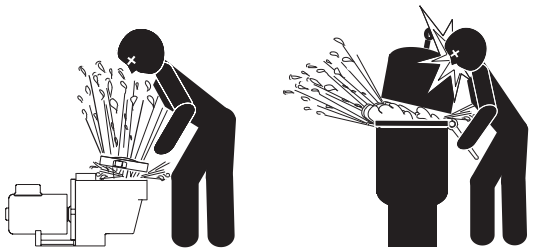

HAZARDOUS PRESSURE: STAND CLEAR OF PUMP AND FILTER DURING START-UP

EasyTouch® PL4/PSL4 Control System Model Part Numbers

EasyTouch PL4/PSL4 CONTROL SYSTEM MODEL PART NUMBERS

522352	PL4 - Single Body / Base System (no Indoor Control Panel, no actuators)
522353	PL4 - Single Body / ScreenLogic® Bundle (no Indoor Control Panel, no actuators)
522354	PSL4 - Pool/Spa / Base System (no Indoor Control Panel, two actuators)
522355	PSL4 - Pool/Spa / ScreenLogic® Bundle (no Indoor Control Panel, two actuators)

EasyTouch® PL4/PSL4 Control System Model Part Numbers (Canada)

522352	PL4 - Single Body / Base System (no Indoor Control Panel, no actuators)
522353	PL4 - Single Body / ScreenLogic® Bundle (no Indoor Control Panel, no actuators)
522354	PSL4 - Pool/Spa / Base System (no Indoor Control Panel, two actuators)
522355	PSL4 - Pool/Spa / ScreenLogic® Bundle (no Indoor Control Panel, two actuators)
520911	IntelliChlor® Salt Chlorine Generator IC20 cell (Canada)
520912	IntelliChlor® Salt Chlorine Generator IC40 cell (Canada)

Section 1

EasyTouch® PL4/PSL4 Control Systems Power Center

EasyTouch® PL4/PSL4 Control Systems Power Center Description

EasyTouch PL4/PSL4 Control Systems Configuration

- EasyTouch Pool Lite 4 Circuit (PL4 - Four circuit pool only system)
- EasyTouch Pool and Spa Lite 4 Circuit (PSL4 - Four circuit pool and spa shared equipment system)

Your EasyTouch PL4/PSL4 Control Systems can control high voltage (120 VAC / 240 VAC) equipment, automatic valve actuators, pumps, lighting, a conventional heater or a solar heating system, heat pump, and the optional IntelliChlor® Salt Chlorine Generator and IntelliChem® Water Chemistry Controller.

Pool and spa service operations can be manually controlled from the Outdoor Control Panel located in the Power Center at the pool equipment pad.

Also available are the optional Indoor Control Panel, Wireless Controller, iS4 Spa-Side Remote, and the QuickTouch® Remote Controller for complete control of pool and spa operations from inside you home or outside around your pool area. The Power Center dimensions are 20” H x 17” W x 5¼” D.

EasyTouch PL4/PSL4 Control Systems Power Center

- Dimensions: 20” H x 17” W x 5-1/4” D
- Includes three 25 AMP HP relays
- 120/240 V transformer with secondary side circuit protection.
- Provides ample space for all high and low voltage wiring needs.
- Multiple knockouts for different sizes of conduit are supplied
- GFCI side knockout.
- The Power Center enclosure is used with external circuit breakers/ sub-panel for pool and spa equipment.

Kit Contents

The following items are included in the Power Center kit.

- EasyTouch PL4/PSL4 Control Systems Power Center Enclosure.
- Relays: qty. 4
- Actuators: (qty. 2 for PSL4 Control System only)
- Temperature Sensor (all models): Water Sensor Long Cable (qty. 1) (o-ring and hose clamp) Air sensor - Short cable (qty. 1)
- Wiring Diagram Label - To affix to the inside front door (see power center door).
- Parts bag: Relay screws (qty. 0, 4, 8, or 10) label sheet
- EasyTouch PL4/PSL4 Control Systems Power Center Installation Guide (this manual).
- For additional information, refer to the EasyTouch PL4/PSL4 Control Systems User’s Guide (P/N 522461).

EasyTouch® Control System PL4/PSL4 Interfaces

Choose one or more of the following interface options to control pool and spa operations.

- **iPhone™/iPad® Touch Interface (P/N 520500)** – Includes Protocol Interface Adapter that connects to existing Desktop or Laptop PC. This allows control of EasyTouch PL4/PSL4 Control Systems via PC (requires PC with an Ethernet connection, and Windows® XP/Win7/Win8 operating system).
- **iTC35 Kit (P/N 520502)** – Includes in-wall color touch screen with Ethernet (RJ45) connection and Protocol Interface Adapter and wireless router. The in-wall Touch screen is custom configured for EasyTouch PL4/PSL4 and EasyTouch PL4/PSL4 systems. Requires an Ethernet cable to router.

iPhone™
(for use with ScreenLogic2™)

Wireless Controller (3 AUX circuits)
(P/N 520547) (Optional)

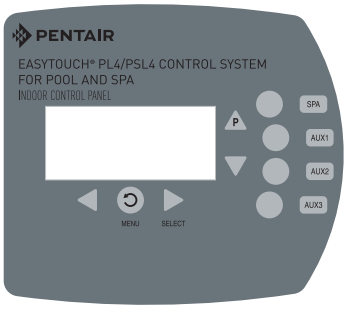

Indoor Control Panel (3 AUX circuits)
(P/N 520549 - Optional)

- **Indoor Control Panel (P/N 522465)** – Monochrome backlit LCD control panel. Connects to the EasyTouch PL4/PSL4 Control Systems circuit board in the Power Center.
- **Wireless Controller (P/N 522464)** – Monochrome backlit LCD control panel. Connects to the EasyTouch PL4/PSL4 Control Systems via a transceiver connected to the control system circuit board in the Power Center.
- **QuickTouch® II (P/N 521245) and QT4 (P/N 520148) Wireless Remote:** Four-function wireless remote for pool and spa functions of your choice. This controller transmitter operates up to 150 feet range from the Power Center.
- **iS4 Spa-Side Controller (P/N 520094) :** 4-function (iS4) Spa-Side remote controller for pool and spa functions of your choice. The controllers can operate up to 150 feet range from the Power Center.

QuickTouch® II Wireless Remote
(P/N 521245(optional

iS4 Spa-Side Remote
(P/N 520094 - Optional)

Installation Overview

WARNING

RISK OF ELECTRICAL SHOCK. BEFORE REMOVING THE HIGH VOLTAGE COVER PANEL FROM THE ENCLOSURE switch the main power **OFF** into the home at the main circuit breaker box.

Before installing the EasyTouch® PL4/PSL4 Control Systems Power Center Installation Overview read the following guidelines carefully:

- The Power Center must be installed at the equipment pad.
- AC power for the Power Center must be provided from the main circuit breaker panel located at the house.
- All electrical equipment, except for UL Listed spa-side remote switches, must be installed no less than five (5) feet (1.5 m), (Canada, 3 mm (9.75 ft) from pool and/or spa, and comply with all national, state, and local codes (UL Listed spa-side remote switches may be installed at near waterline).
- Install the Power Center no less than five (5) feet (1.5 m) from pool, spa, and hot tub. Additionally, the installation shall allow the user enough space to stand clear of the filter and pump during system start-up, as explained on page vi.
- The TYPE 3R “Rainproof” enclosure can be mounted outside or inside of a pool equipment shed or other enclosure.
- Before choosing the final location for the enclosure, consider the length of all of the conductors that will have be connected to the enclosure. Make sure to consider cable lengths for the sensors to the Power Center location. The air temperature sensor cable is three (3) feet (91.44 cm) long and the water temperature sensor cable is 25 feet (7.62 m) long.
- Mount the Power Center on a flat vertical surface so the conduit knockouts are located at the bottom of the enclosure. Upper and lower brackets are provided to mount the enclosure.
- DO NOT mount the enclosure horizontally. Water can enter the conduit knockouts and cause damage to the system and an electrical shock hazard. Install with conduit knockouts down.
- Consider the Power Center location when routing conduit carrying the AC power to the Power Center, and the conduit that will be run to the high voltage equipment.
- Install the Power Center so that drainage is provided for all electrical components.
- Motors should be listed for pool and spa applications and have built-in thermal protection.
- Allow at least 5 ft (1.5 m) of unobstructed access to the front of the Power Center for the owner or service personnel.
- The Power Center provides grounding screw terminals for grounding all equipment. All equipment including the Power Center enclosure must be bonded to earth ground.

EasyTouch® PL4/PSL4 Control Systems Power Center

The EasyTouch PL4/PSL4 Control Systems Power Center (without sub-panel) should be installed at the equipment pad. AC power to the Power Center is provided from the an electrical circuit breaker panel (sub-panel) installed at the equipment pad. The Power Center should be installed next to the sub-panel.

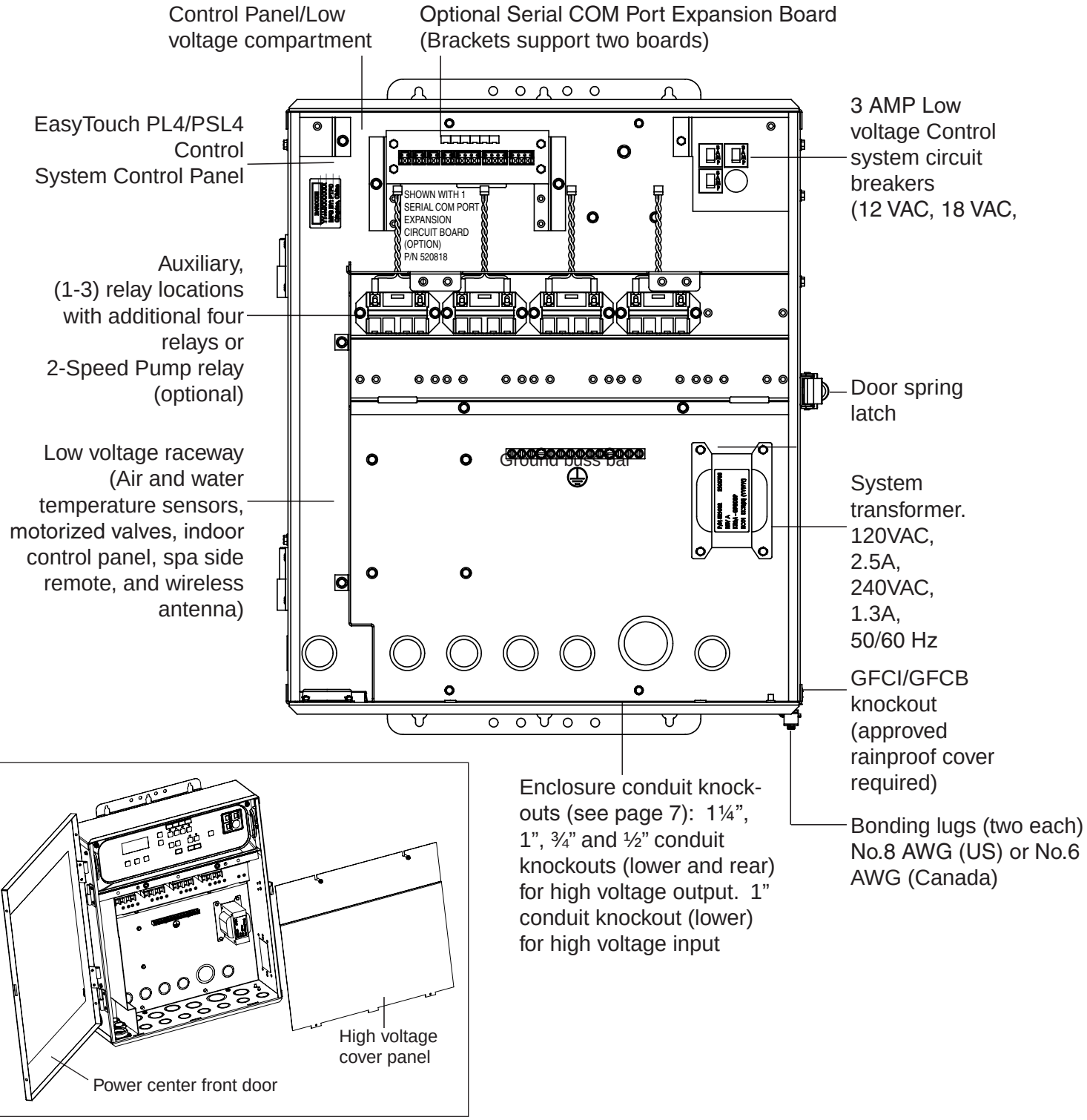

EasyTouch PL4/PSL4 Control Systems Power Center (20" H x 17" W x 5¼" D)
(Front view with door and high voltage cover panel removed)

Preparing the Power Center Enclosure

⚠WARNING BEFORE INSTALLING THE Power Center AND POWER CENTER, ALWAYS SWITCH OFF THE MAIN POWER into the home at the main circuit breaker box.

Before mounting the Power Center, first remove the front door and the high voltage cover panel to access the enclosure conduit knockouts and low voltage raceway (see pages 3 and 4).

To remove the Power Center high voltage cover panel:

1. Unpack the Power Center from the shipping carton.
2. Unlatch the front door spring latch and open the front door.
3. Remove the two (2) retaining screws securing the high voltage cover-panel. Remove the HIGH VOLTAGE COVER PANEL from the enclosure.
4. For new installation, proceed with:
   - **Mounting the Power Center**, page 6
   - **Connecting AC Power to the Power Center**, page 7
   - **Electrical Wiring and High Voltage Connections**, page 8
   - **Installing Conduit and Conductors to the Enclosure**, page 8
   - **Accessing the Control Circuit Board and Electronics**, page 10
   - **Connecting a Standard Gas Heater**, page 17
5. After electrical connections have be completed, reinstall the high voltage panel and secure it with the two (2) retaining screws.

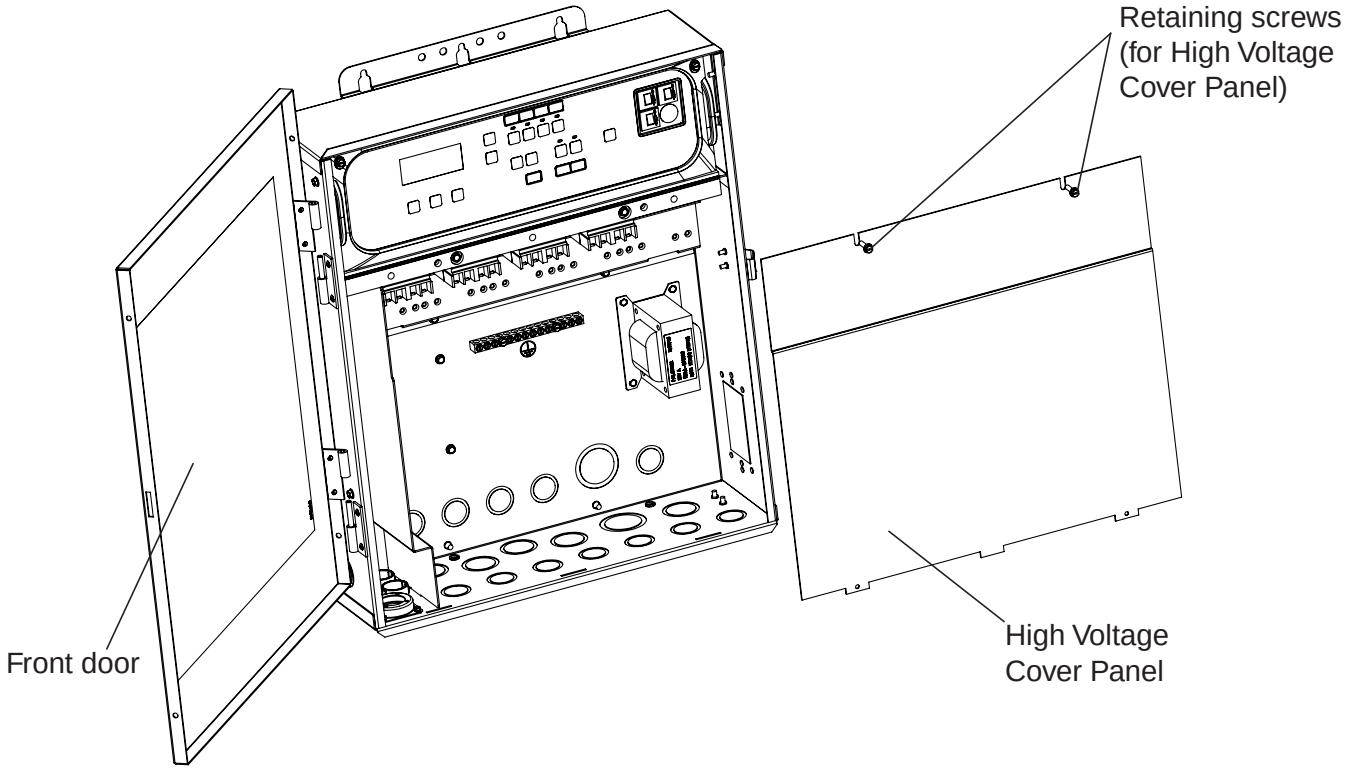

EasyTouch® PL4/PSL4 Control Systems Power Center (front view)

Mounting the EasyTouch® PL4/PSL4 Control Systems Power Center

Mount the EasyTouch PL4/PSL4 Control Systems Power Center enclosure on a flat vertical surface, such as a wall or post at eye level, at least 5 ft. (1.5 m), (Canada 3 m (9.75 ft)) from the pool, spa or hot tub.

To mount the Power Center:

1. Position the enclosure against a vertical flat surface. If wall anchors are being used, support the enclosure in position (horizontally level and square) against the surface and mark the bracket hole pattern on the wall.
2. Secure the enclosure with three (3) screws in the top and lower mounting bracket holes. If using wall anchors, drill and set the anchors and secure the enclosure with screws.

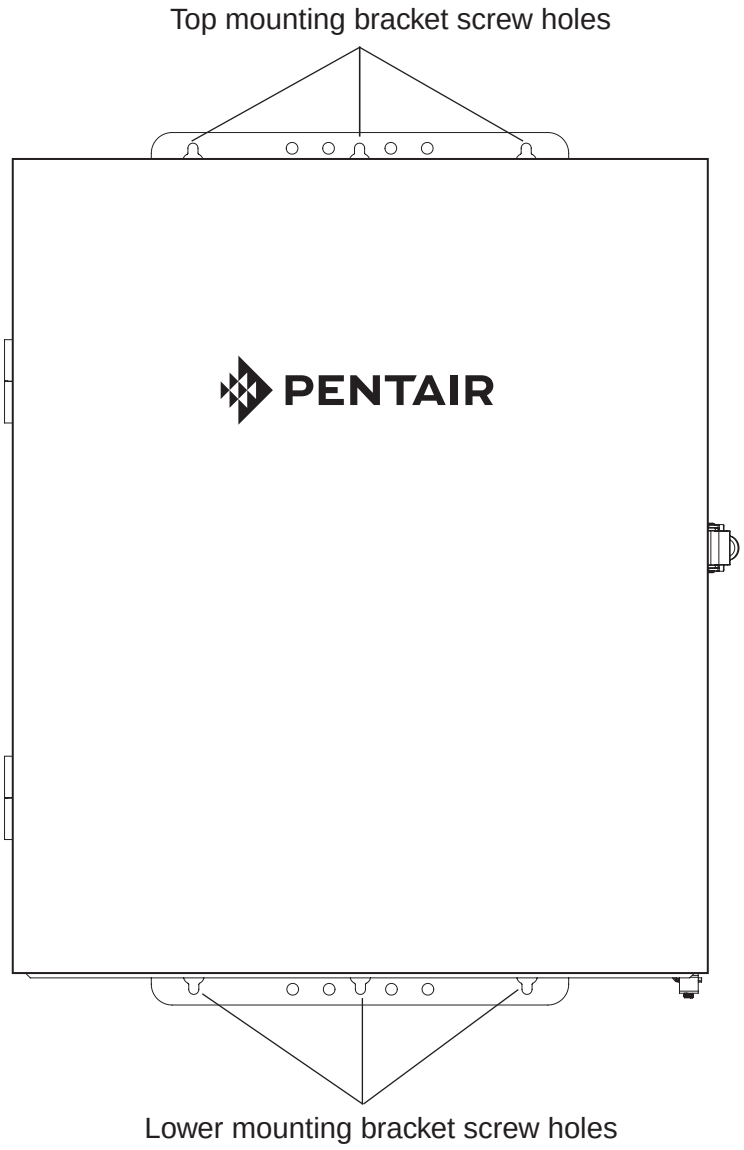

EasyTouch PL4/PSL4 Control Systems Power Center (front view)
(front door and high voltage panel removed)

Installing Conduit and Conductors to the Power Center

Before installing electrical conduit to the enclosure, read the following recommended guidelines:

NOTE: All electrical installation, including electrical wiring methods and materials used to complete the electrical installation of the EasyTouch PL4/PSL4 Control Systems **MUST BE PERFORMED BY A SERVICE PROFESSIONAL AND/OR UNDER DIRECT SUPERVISION OF A QUALIFIED ELECTRICIAN** in accordance with the National Electrical Code or the Canadian Electric Code, as well as any local electrical codes in effect at the time of installation. **Refer to NEC 680 (b) or CEC 687-060, 062, and 066 for further details.**

- Determine the number of low and high voltage circuits being used in the EasyTouch PL4/PSL4 Control Systems. The conduit size and runs is based on the conductor size, and the number of conductors within the conduit. *The number of pieces of equipment to be controlled will dictate the size of the conduit. DO NOT RUN HIGH VOLTAGE AND LOW VOLTAGE CONDUCTORS IN THE SAME CONDUIT.*
- Use 14 AWG minimum to 6 AWG maximum 140°/158° F (60°/70° C) or better copper conductors for relay circuits depending on the load requirement. Be sure to follow all NEC regulation safety codes for the number and size of conductors that can be installed in various sizes of conduit.
- Supply conductor must be sized to support all loads. The maximum supply current must NOT exceed 150 AMP at 120 VAC/240 VAC.
- Supply circuit must be protected by suitable breaker rated no higher than 150 AMP. If one relay is used for more than one device, verify that the total current draw (all equipment) does not exceed the current rating of the circuit.
- The EasyTouch PL4/PSL4 Control Systems circuit board requires 120 VAC, 3A power to operate the control logic circuits. The optional IntelliChlor® Salt Chlorine Generator must be powered from it's own exterrnal Power Supply (provided with the IntelliChlor SCG cell).

Connecting AC Power to the Power Center

Before installing electrical conduits and connecting AC power to the Power Center enclosure, read the following recommended guidelines:

⚠WARNING **TO AVOID AN ELECTRICAL HAZARD AND EQUIPMENT DAMAGE TO THE ENCLOSURE AND INTELLICHLOR CELL: FIRST DISCONNECT AC POWER TO THE ENCLOSURE BEFORE CONNECTING THE INTELLICHLOR COMMUNICATION CABLE.**

- Determine the number of low and high voltage circuits being used in the Power Center. The conduit size and runs needed based on the conductor size, and the number of conductors within the conduit. The enclosure conduit knockouts sizes are 1¼", 1", ¾" and ½".
- Enclosure conduit knockouts for AC power are located on the sides, bottom and back of the enclosure. Conduit knockouts sizes for AC power are: 1¼", 1", ½" and ¾". It is recommended to use 1¼" x 1" conduit for the main AC power conductors.
- The Power Center enclosure must be located a minimum of 5 ft. (1.5 m), (Canada 3 m (9.75 ft)) from the inside wall of pool or spa.

Remove the enclosure conduit knockouts as needed:

- Low voltage raceway has two ½" x ¾" conduit knockouts located on the left side and rear of the enclosure.
- High voltage compartment has twelve ½" x ¾", five ¾" x 1" and two 1¼" x 1" conduit knockouts located on the bottom of the enclosure.
- To avoid obstruction into the Power Center, when using electrical conduit complete the installation of the conduit before concrete is poured. Also, underground conduit should be positioned in well compacted soil. Ensure that all conduit joints are well sealed and watertight.

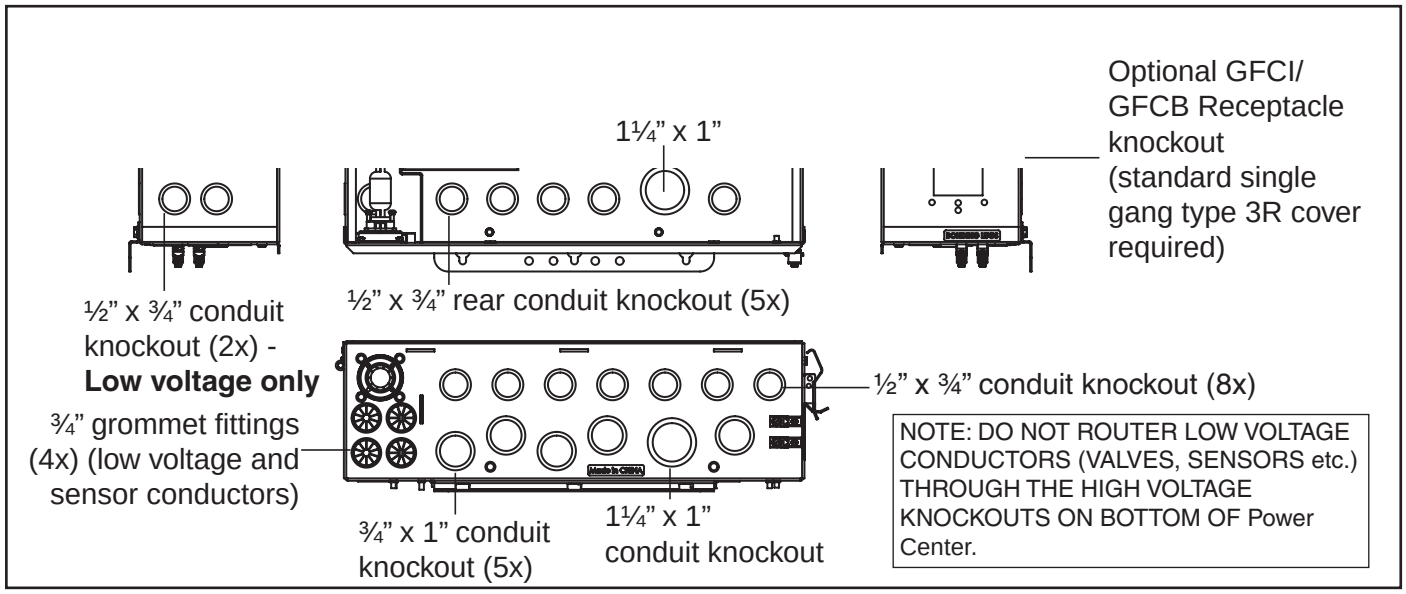

EasyTouch PL4/PSL4 Power Center (lower, side and back panel knockouts)

Electrical Wiring and High Voltage Connections

Power Center Main AC Power Connection (External Circuit Breakers - Sub-Panel)

External (sub-panel) circuit breakers need to be supplied and installed by the site installer. Run properly rated conductors (L1,L2, N, and GROUND) from the primary house electrical panel to the main AC power connections on the Power Center transformer (see page 10). The connection at the main house panel should be to a 240 VAC circuit breaker rated at 150 AMP maximum.

For recommended circuit breaker types, refer to the circuit breaker chart on the inside front door of the Power Center. Be sure to follow all manufacturer's circuit breaker rating requirements. Some pool equipment require connection to ground fault circuit breakers (GFCI). Check the current local and NEC (CEC) codes for these requirements. **Note: For recommended field conductor gauge usage, refer to conductor size listed on the circuit breaker label.**

Grounding and Bonding Connections

Connect a ground conductor from the primary house electrical panel to the Power Center GROUND BUS BAR (see page 27). Also ground each piece of high voltage (120 VAC or 240VAC) equipment that is connected to the Power Center relays or circuit breakers. Also connect the Power Center to the pool bonding system using 8 AWG (6 AWG for Canada) conductor. There are two (2) GROUND LUGS provides on the bottom of the Power Center (see page 5).

Note: Wiring to Power Center: 14 AWG minimum copper conductors for relays and other equipment sized according to the ampacity of the load.

To install electrical conduit and conductors as needed:

- Use the rectangular knockout on the right side of the Power Center enclosure to mount an approved GFCI or GFCB with rainproof type 3R cover (supplied by installer) for direct connection of underwater pool and spa lights.
- Use the one of the three low voltage raceway 3/4” holes located on the underside of the enclosure for the temperature sensor conductors (see page 7).

TO AVOID AN ELECTRICAL HAZARD - Do not connect the power source conductors to the Power Center until all electrical connections for all loads (heaters, pumps, motorized valves, and lights etc.) have been completed.

NOTICE: For the AC supply conductor into the Power Center from the main circuit breaker at the house, use three conductors, one each for red, black, and white (or red, red and black for 240 VAC). The maximum load is 150 AMP at 120 VAC/240 VAC 60 Hz/50 Hz. These conductors should be secured to supply side of circuit breaker base. For the main AC power conduit, it is recommended to use the 1¼” x 1” conduit knockout located directly under the enclosure circuit breaker (see page 7).

EasyTouch PL4/PSL4 Power Center Wiring Diagram
(for complete wiring details, see page 32 and inside front door of Power Center)

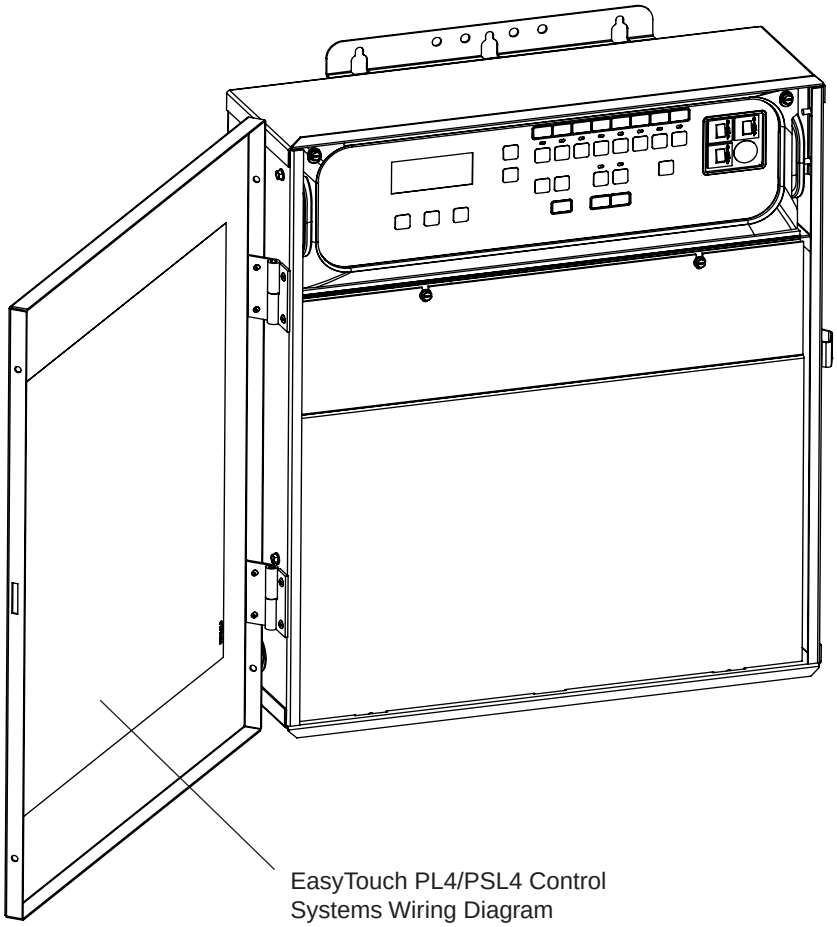

EasyTouch PL4/PSL4 Control Systems Power Center Wiring Instructions

- For Rewiring the EasyTouch PL4/ PSL4 Control Systems Transformer for 240 VAC,

Accessing the EasyTouch® PL4/PSL4 Control Systems Circuit Board and Electronics

The main EasyTouch PL4/PSL4 Control Systems circuit board is located behind the control panel located on the front of the Power Center. The main circuit board provides connectors for the auxiliary relays, valve actuators and sensors. To access the circuit board connectors, fold down the main control panel. Note:

To access the EasyTouch PL4/PSL4 Control Systems circuit board connectors:

1. Loosen the two retaining screws securing from the top edge of the control panel.
2. Fold down the control panel to access the rear of the circuit board for the electrical connections.
3. For relay, valve actuators and sensors installation and connection instructions see the following:
   - **Connecting EasyTouch PL4/PSL4 Control Systems Relays**, page 11
   - **Connecting EasyTouch PL4/PSL4 Control Systems Relays**, page 12
   - **Installing Valve Actuators**, page 13
   - **Installing and Connecting Temperature Sensors**, page 15
4. After electrical connections have be completed, close the control panel and tighten the two retaining screws.

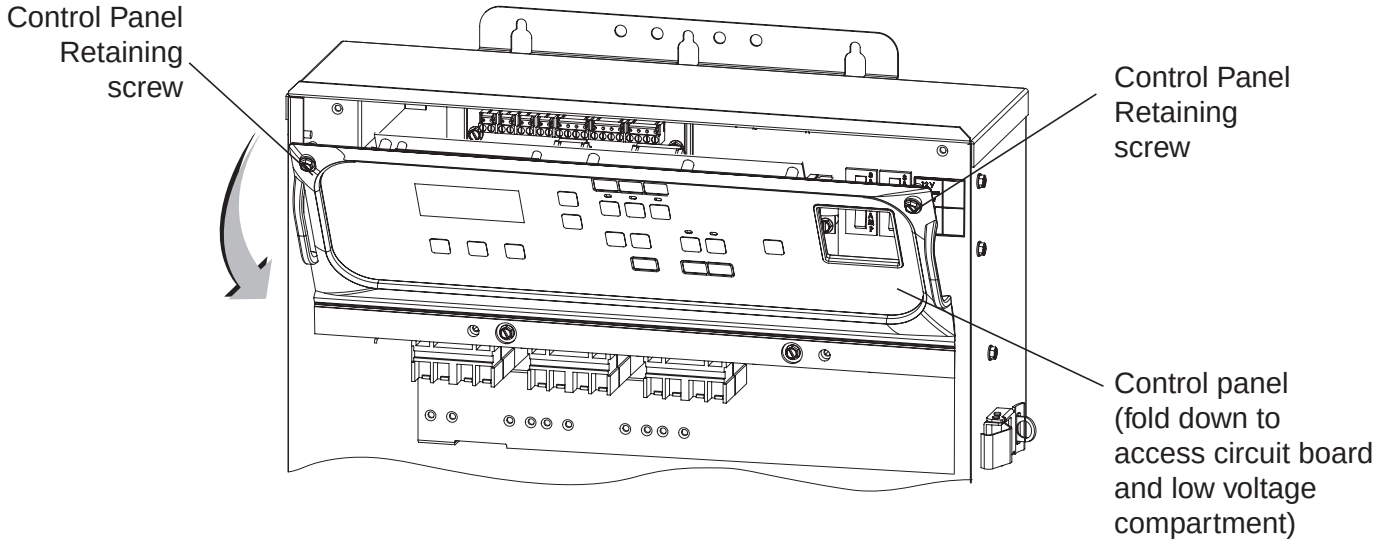

EasyTouch PL4/PSL4 Control Systems Power Center (front view)
(front door and high voltage compartment panel removed)

Connecting EasyTouch® PL4/PSL4 Control Systems Relays

The EasyTouch PL4/PSL4 Control Systems Power Center includes three pre-installed relays (Filter Pump, AUX1, AUX2, AUX3). To connect the pre-installed relay cable plugs to the EasyTouch PL4/PSL4 Control Systems circuit board:

- Route each of the power relay cable plugs up into the low voltage compartment to the EasyTouch PL4/PSL4 circuit board. Insert the relay plugs into the two-pin sockets on the circuit board, beginning with **FLTR PUMP**, then **AUX1**, **AUX2**, and **AUX3**. For the actuator two-pin socket locations, see below. For the EasyTouch PL4/PSL4 Control Systems wiring

Note: Install the optional Two-Speed Pump relay (P/N 520198) cable plug into the 2SPD two-pin socket on the EasyTouch PL4/PSL4 Control Systems circuit board. For installation and operation information, refer to the Two-Speed Relay User's Guide (P/N 520210).

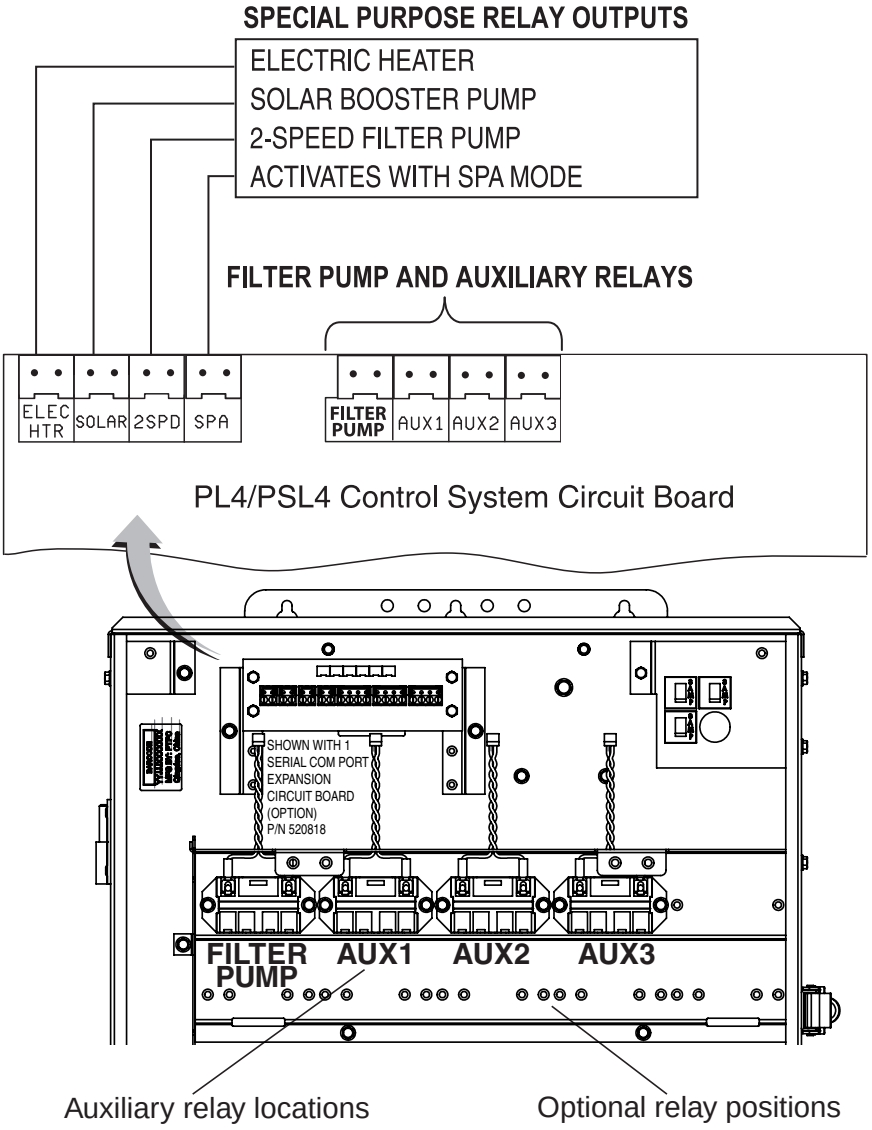

Installing Valve Actuators

The EasyTouch PL4/PSL4 Control Systems can control up to four automatic valve actuators. Two of the valve outputs are dedicated to the pool/spa intake (INTAKE) and return (RETURN) valves. Valve A or Valve B actuators are for general purpose use (solar, water-feature, in-floor cleaner, etc.). For EasyTouch PL4/PSL4 Control Systems shared equipment systems there are two motorized valve actuators (CVA-24T, P/N 263045) provided in the kit.

To install the valve actuator (two-way valve example shown):

1. Remove the valve knob, handle and the four screws, from the valve cover (indicated with arrows).
2. Align the splines of the actuator shaft over the shaft of the valve.
3. If the actuator is not aligned with the mounting holes on the valve cover, rotate the actuator (while still attached to the valve) until the actuator is positioned correctly over the valve.
4. Secure the actuator with the screws provided. Only use self-tapping screws when required.
5. Mount the valve handle and knob onto the actuator.

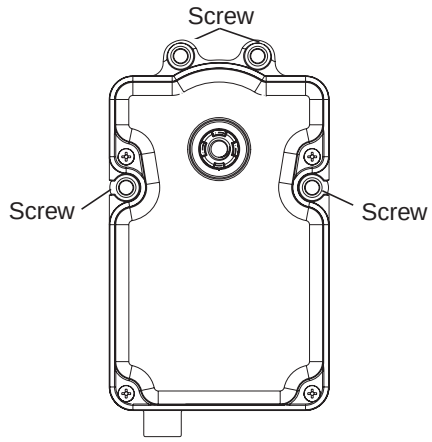

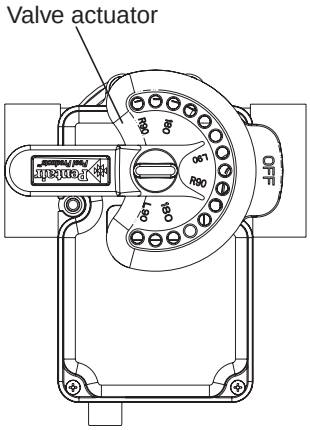

Adjusting the valve position (3-way valve shown below)
If the valve rotates to the wrong position, adjust the switch on the back of the actuator between ON1 and ON2 positions. This will rotate the valve to the correct position. The following diagram shows the standard plumbing and valve actuator position.

Valve Handle Operation: To reposition the valve handle: Rotate the handle to the desired "OFF" position. The diverter valve handle OFF indicator, represents the current position of the valve's internal diverter seal which will stop the flow of water. The valve handle stop-pins determine the position of the diverter valve's internal seal to stop or allow water flow. Note: When a motorized valve actuator is installed, stop-pins are not required.

Handle Stop-Pins Positions: The two movable stop-pins can be set to allow the valve handle's position to completely stop the flow of water, regulate a limited flow, or allow the maximum flow. To set the stop-pins: Insert the stop-pins in the pin holes according to the corresponding "degree indicator" displayed on top of the handle. The stop-pin positions can be set to 180°, L90° (left-side) and R90° (right side). Repositioning of either stop-pins allows the handle to be set to any desired percentage of water flow.

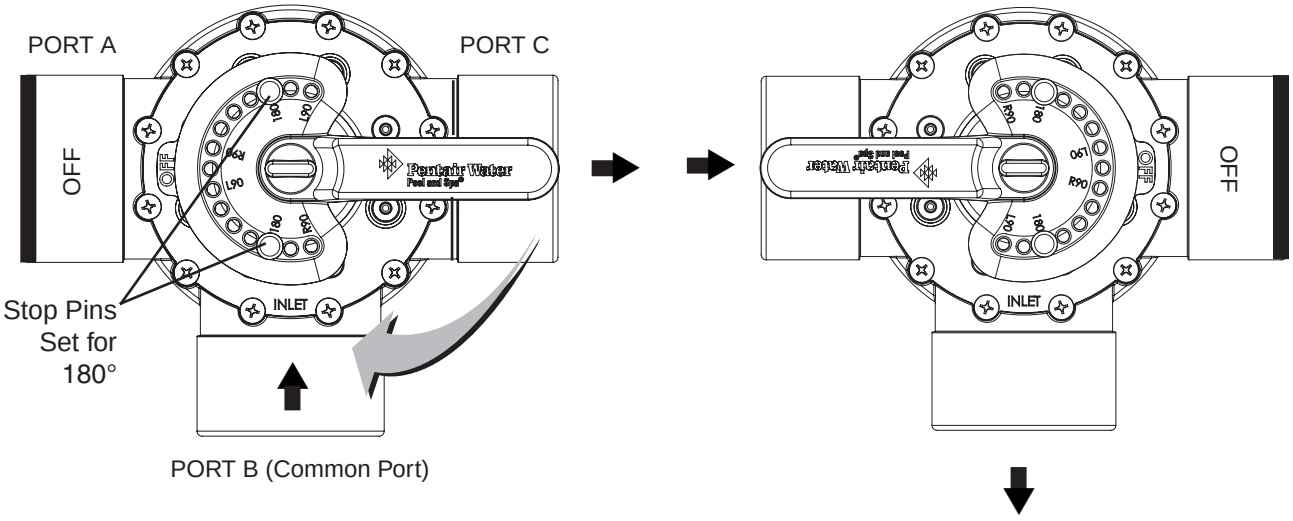

6. At the Power Center, route the cable up through the 1” grommet and low voltage raceway to the circuit board (see page 3).
7. **EasyTouch® PL4/PSL4 Control Systems Circuit Board:** Connect the Valve A actuator cable plug into the **INTAKE** (suction) 3-pin socket, and Valve B actuator cable plug into the **RETURN** three-pin socket on the right side of the EasyTouch PL4/PSL4 Control Systems circuit board. Excess cable can be coiled in the enclosure low voltage raceway left side compartment (see page 3). Do not coil the conductor in upper low voltage compartment. For valve actuator circuit board socket location see above and page 31. For plumbing requirements, see Item 2 and 3 on

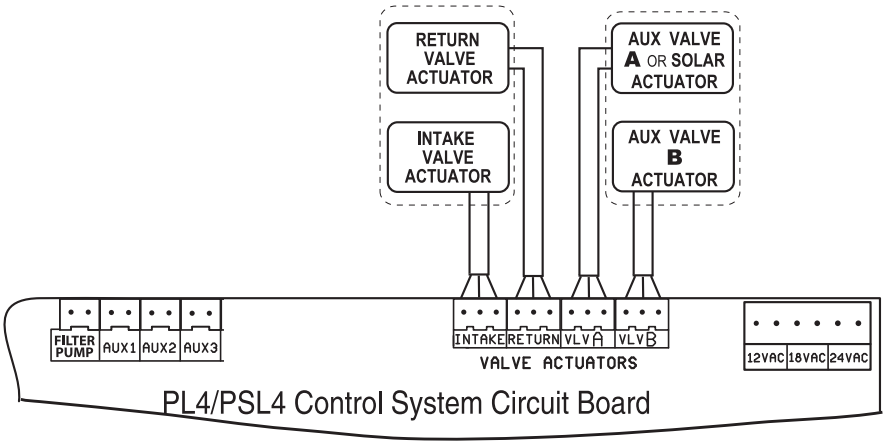

Installing and Connecting Temperature Sensors

Water Temperature Sensor

To install the water sensor:

1. Select a convenient location to mount the water sensor in the plumbing system between the filter pump and filter. Drill a 3/8” diameter hole in one side of the pipe,
2. Insert tip of sensor into the hole. Use the band clamp to secure the sensor to the pipe. Tighten the clamp just enough so that the o-ring begins to flatten. Do not overtighten
3. Fasten the cable to the plumbing with cable ties.
4. Run 22 AWG two-conductor cable (included in kit) between the sensor and the enclosure. Route the cable up through the low voltage raceway to the circuit board.
5. Cut off the excess conductor and the strip conductors ¼ inch. Use waterproof connectors (provided) to connect the sensor to cable.

   EasyTouch PL4/PSL4 Control Systems: Insert the conductors into the **WATER SENSOR** screw terminals (**J21**) on right-side of the motherboard. For sensor circuit board screw terminal location
   (see below and page 31).

   EasyTouch PL4/PSL4 Control Systems: Insert the conductors into the **WATER SENSOR** screw terminals (**J5**) on right-side of the Personality circuit board. For sensor circuit board screw terminal location (see below and pages 41 and 42).

Ambient Air Temperature Sensor (for freeze protection)

To install the air sensor:

1. Mount the sensor in the open air, in a shaded area, away from air conditioners. During the winter months, to avoid freeze damage to pool and spa equipment, mount the air sensor in a shaded area to assure proper temperature readings. The main screen displays the current ambient air temperature.
2. Fasten the cable to the plumbing with cable ties.

3. Run 22 AWG two-conductor cable (included in kit) between the sensor and the enclosure. Route the cable up through the low voltage raceway to the circuit board.
5. Cut off the excess conductor and the strip conductors ¼ inch. Use waterproof connectors (provided) to connect the sensor to cable.

   EasyTouch® PL4/PSL4 Control Systems: Insert the conductors into the **AIR** screw terminals (**J21**) on right side of the EasyTouch PL4/PSL4 Control Systems circuit board. For sensor circuit board screw terminal location (see below and page 31).

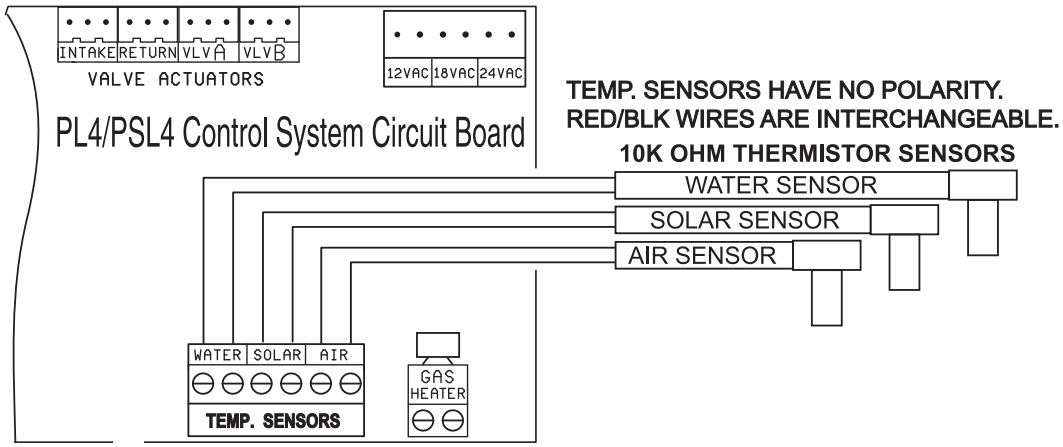

Temperature vs. Resistance Data

The EasyTouch PL4/PSL4 Control Systems use 10k Ohm thermistor sensors. When the solar sensor is disconnected from the control system, the sensor will read 10k Ohm at 77º F (25ºC). Refer to the following table for the resistance at other temperatures. An accurate reading should give a temperature setting that is accurate

Temperature		Resistance	Temperature		Resistance
°C	°F	Ohm	°C	°F	Ohm
-26	-15	139,300	16	60	15,310
-25	-13	130,300	18	65	13,480
-23	-10	118,000	21	70	11,880
-21	-5	100,200	24	75	10,500
-20	-4	97,000 25	25	77	10,000
-18	0	85,350 27	27	80	9,298
-15	5	72,910 29	29	85	8,250
-12	10	62,480 30	30	86	8,056
-9	15	53,640 32	32	90	7,331
-10	14	55,300 35	35	95	6,530
-7	20	46,230 38	38	100	5,826
-5	23	42,300 40	40	104	5,326
-4	25	39,910 41	41	105	5,209
-1	30	34,560 43	43	110	4,663
0	32	32,600 45	45	113	4,367
2	35	30,000 49	49	120	3,757
4.7	40	26,100 50	50	122	3,602
5	41	25,400 52	52	125	3,381
7	45	22,760 54	54	130	3,047
10	50	19,900 55	55	131	2,985
13	55	17,440 57	57	135	2,750
15	59	15,700			

Solar Temperature Sensor (Optional)

Run a two-conductor cable between the sensor and the EasyTouch® PL4/PSL4 Control Systems circuit board in the Power Center.

To install the solar sensor:

1 Mount the sensor on a flat surface, with the same exposure to sun as the solar collectors (next to the collectors is recommended) or any sunny location. Do not let the sensor touch the panels. **WARNING: DO NOT DRILL HOLE AND CLAMP SENSOR INTO SOLAR PIPE**. For glazed panels, install the sensor between collector and glazing.

2 If necessary, splice a two-conductor extension conductor to the sensor. Run two-conductor cable between the sensor and the enclosure. Use waterproof connectors to connect the sensor to the cable. Use twisted pair 20 AWG outdoor rated sensor wiring and be sure the conductor connections are protected from the environment. Use shielded cable for long runs or runs near other electrical wiring.

3. Cut off the excess conductor and the strip back conductors ¼ inch. Use waterproof connectors (provided) to connect the sensor to cable.
EasyTouch PL4/PSL4 Control Systems: Insert the conductors into the **SOLAR SENSOR** screw terminals **(J21)** on right side of the EasyTouch PL4/PSL4 Control Systems circuit board. For sensor circuit board screw terminal location (see below and page 31).

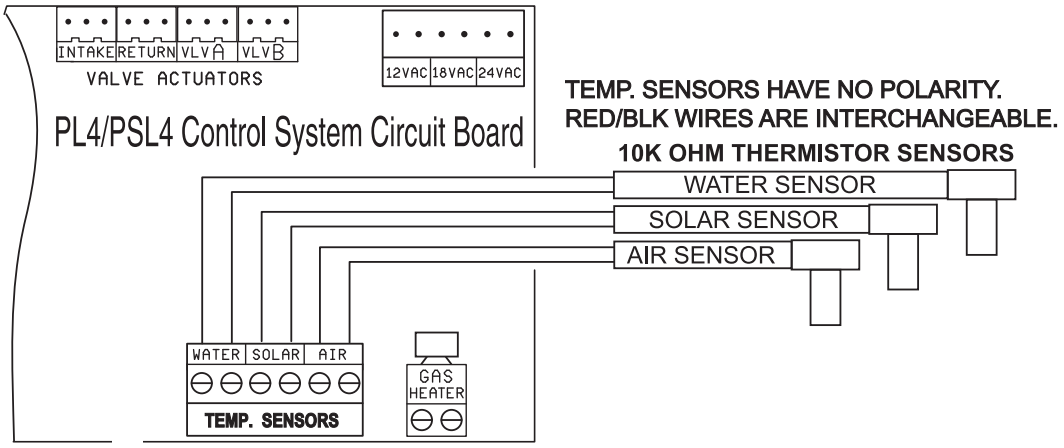

Connecting a Standard Gas Heater

For the EasyTouch® PL4/PSL4 Control Systems heater control, there are low voltage dry contacts that can be connected to most gas heaters or heat pumps with 24 VAC control circuits . The following connection instructions are for gas heaters and heat pumps with low voltage thermostats.

To connect the heater thermostat cable plug to the EasyTouch PL4/PSL4 Control Systems circuit board:

1. Switch the power OFF to the heater.
2. Remove the factory installed jumper from the heater's "Ext Switch" connector. **CAUTION IMPORTANT: DO NOT** disconnect or conductor around the thermostat, pressure switch, high limit switch, or other safety devices. At the heater, connect the conductors in accordance with heater manufacturer's instructions. For older heaters without instructions for remote operation, connect the conductors to the Fireman's switch connections in series with the thermostat, pressure switch, and other safety switches.
3. Run a two-conductor cable from the heater thermostat "Ext Switch" connector to the low voltage raceway to the Personality board in the Power Center. **NOTE:** Use 221° F (105° C) temperature rated conductor for connection to the heater. When connecting conductors inside the heater, be cautious of HOT internal parts of the heater. Refer to the minimum temperature rating for conductors recommended by the manufacturer. See the heater owners manual for details.
4. Strip back the conductors ¼ in.

   EasyTouch PL4/PSL4 Control Systems: Insert the conductors into the **GAS HEATER** two-screw terminals **(J19)** on the motherboard. For heater circuit board screw terminal location, see below and page 31).

   CAUTION: Be sure that the conductors from the heater to the EasyTouch PL4/PSL4 Control Systems Power Center are not near or touching any line voltage conductors in the heater. Failure to follow these instructions may cause the heater to malfunction.
5. Set the Power (Thermostat Select) switch to either "Pool" or "Spa."
6. Set the "Pool" and "Spa" thermostats to their maximum position.

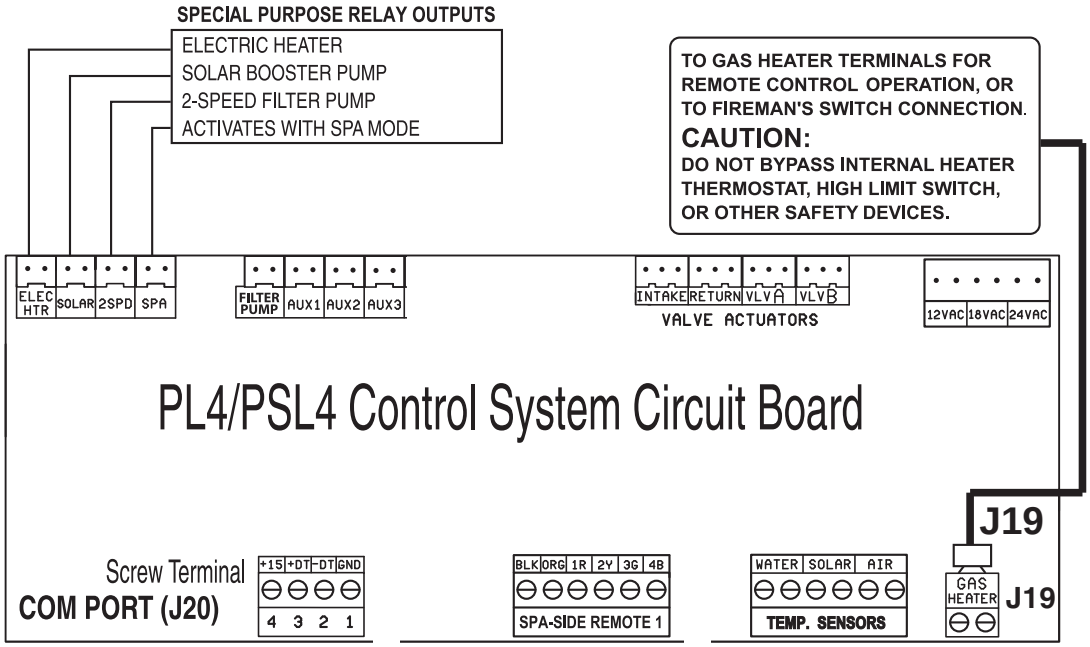

Wiring Pentair UltraTemp® Heat Pump

Be sure to check the UltraTemp Heat Pump terminal block conductor colors and pinouts (located on the back of the Auto Set board) before connecting it to the EasyTouch® PL4/PSL4 Control Systems COM port. The See the wiring table below for the pin configuration.

IMPORTANT: On the UltraTemp heat pump AutoSet circuit board ONLY CONNECT PIN 3 (YELLOW) and PIN 2 (GREEN) to the EasyTouch PL4/PSL4 Control Systems COM port pins YELLOW and GREEN respectively. Do not connect pin 1 or pin 4 on the AutoSet board or the COM port. These pins are not

COM Port Wire Color	Descripion	UltraTemp Heat Pump Pin Number and Wire Color
PIN 4 (RED) **(DO NOT USE)**	+15 VDC	**PIN 4 (DO NOT USE)**
PIN 3 (YELLOW)	+ DATA	PIN 3 (YELLOW)
PIN 2 (GREEN)	- DATA	PIN 2 (GREEN)
PIN 1 (BLACK) **(DO NOT USE)**	GROUND	**PIN 1 (DO NOT USE)**

Wiring IntelliFlo® Pumps

The RS-232 communication cable (provide with IntellliFlo pump) consists of a 50 ft 22 AWG four conductor low voltage cable. The EasyTouch PL4/PSL4 Control Systems filter pump output is rated at 120 VAC, 15 AMP maximum. Check the electrical rating marked on the pump motor before connecting it to the system.

To connect the IntelliFlo pump communication cable to the Power Center:

1. Switch AC power OFF to the Power Center at the main house circuit breakers.
2. Run the communication cable from the pump to the enclosure.
3. Insert the cable conductors into the one of the plastic grommet fittings, located on the lower left side of the enclosure and pull the cable up through the low voltage to the PL4/ EasyTouch PL4/PSL4 Control Systems circuit board.
4. Strip back the outer jacket four (4) inches. Strip back each conductor a ¼-inch.
5. **EasyTouch PL4/PSL4 Control Systems COM Port (J20):** Insert the conductors into the COM Port **(J20)** screw terminals located on the top of the EasyTouch PL4/PSL4 Control Systems circuit board (see diagram below). Secure the conductors with the screws. For wiring details, refer to the pin configuration shown below. Note: Multiple conductors may be inserted into a single screw terminal.

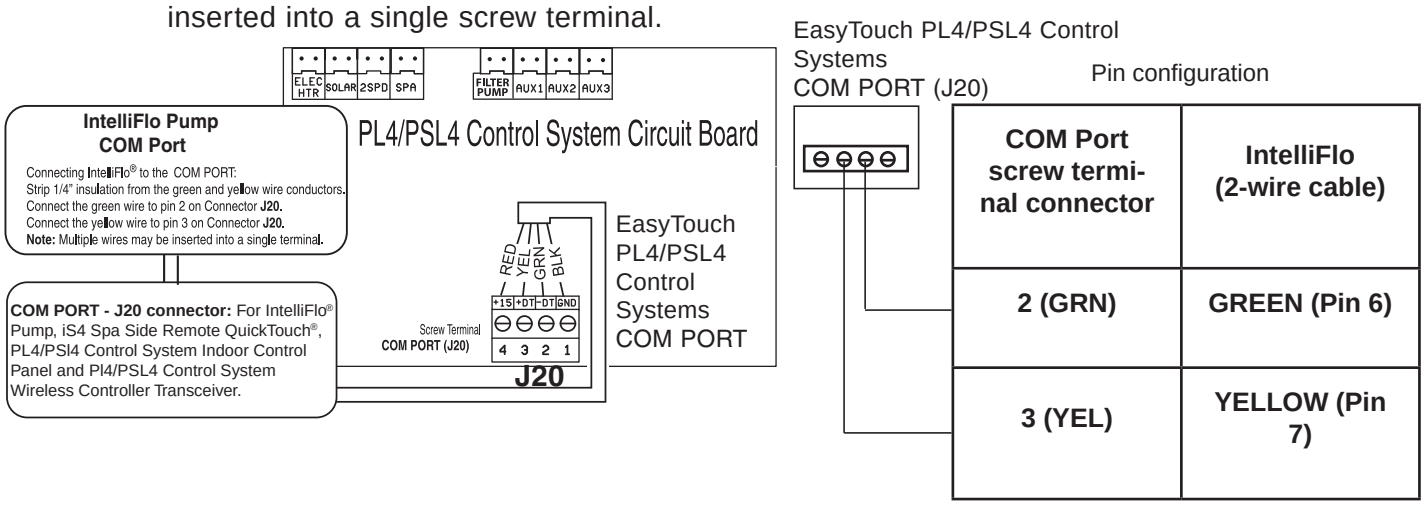

Wiring a Salt Chlorine Generator

Be sure to check each conductor color between the salt chlorine generator and the EasyTouch® PL4/PSL4 Control Systems Power Center as shown in the following wiring tables.

Commonly used salt chlorine generator wiring is shown but you should still verify with the manufacturers documentation. Failure to connect the salt chlorine generator properly can permanently damage the EasyTouch PL4/PSL4 Control Systems and/or salt chlorine generator.

Wiring Description (EasyTouch PL4/PSL4 Control Systems COM Port to the IntelliChlor SCG Power Center)

EasyTouch PL4/PSL4 Control Systems COM Port Wiring Color Connection	Descripion	From IntelliChlor Power Center COM Port
RED	+15 VDC	RED
YELLOW	+ DATA	YELLOW
GREEN	- DATA	GREEN

Wiring Description (Hayward® or Jandy® Power Center COM Port)

Hayward® or Jandy® Power Center COM port wiring color connection	Descripion	IntelliChlor Salt Chlorine Generator
RED	+15 VDC	RED
YELLOW	+ DATA	BLACK
GREEN	- DATA	YELLOW
BLACK	GROUND	GREEN

Wiring IntelliChem® Controller to

Be sure to check each conductor color between IntelliChem Controller and the EasyTouch PL4/PSL4 Control Systems Power Center CON port terminals as shown in the following wiring table.

Wiring Description (IntelliChem COM Port to EasyTouch PL4/PSL4 Control Systems COM Port (J20)

IntelliChem Controller COM Port (J7) wiring color connection	Descripion	From EasyTouch PL4/PSL4 Control Systems COM Port
RED	+15 VDC	RED
YELLOW	+ DATA	YELLOW
GREEN	- DATA	GREEN
BLACK	GROUND	BLACK

Wiring IntelliChlor (SCG) Transformer to Filter Pump Relay

IMPORTANT! IntelliChlor (SCG) AC transformer wiring Instructions: ***When using the EasyTouch PL4/PSL4 Control Systems with the IntelliChlor (SCG) option , be sure the IntelliChlor (SCG) AC transformer conductors are connected to the PUMP SIDE OF THE MAIN FILTER PUMP RELAY located in the enclosure (see page 25). This ensures that the IntelliChlor cell produces chlorine only when the main filter pump is on. This method does not require a ground fault circuit-interrupter (GFCI) for the IntelliChlor power center.***

WARNING **BEFORE REMOVING THE HIGH VOLTAGE COVER PANEL FROM THE Power Center,** switch the main power **OFF** into the home at the main circuit breaker box and also switch **OFF** the main power to the Power Center.

WARNING **TO AVOID AN ELECTRICAL HAZARD AND EQUIPMENT DAMAGE TO THE ENCLOSURE AND INTELLICHLOR CELL: FIRST DISCONNECT AC POWER TO THE ENCLOSURE BEFORE CONNECTING THE INTELLICHLOR COMMUNICATION CABLE.**

To connect the IntelliChlor (SCG) transformer conductor to the main filter pump relay:

1. **Switch AC power OFF** to the enclosure at the main house panel circuit breaker.
2. Loosen the two retaining screws securing HIGH VOLTAGE FRONT COVER PANEL. Remove the panel from the enclosure (see illustration below).
3. **Locate the MAIN FILTER PUMP RELAY. Connect the IntelliChlor SCG transformer conductors to the LOAD SIDE of the relay as shown on page 25.**
4. After electrical connections have be completed, install the HIGH VOLTAGE FRONT COVER PANEL and tighten the two retaining screws to secure in place.
5. **Switch AC power ON** to the enclosure.

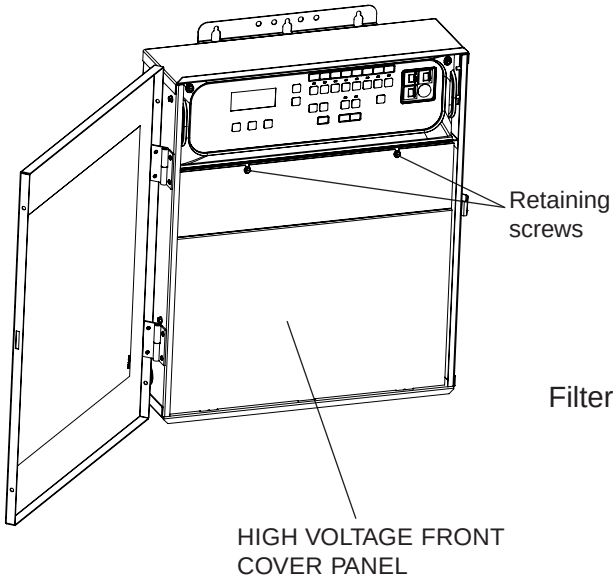

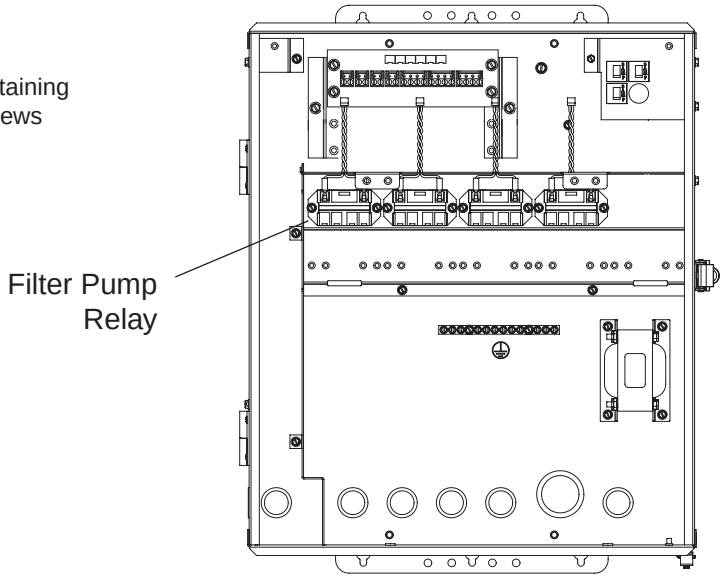

Rewiring the System Transformer for 240 VAC

The EasyTouch® PL4/PSL4 Control Systems Power Center system transformer can be wired for 120 VAC at 2AMP 50/60 Hz (factory installed) or 240 VAC at 1AMP 50/60 Hz. The system transformer is pre-wired at the factory for 120 VAC service.

To rewire the system transformer and for 240 VAC:

WARNING **BEFORE REMOVING THE HIGH VOLTAGE COVER PANEL FROM THE Power Center ENCLOSURE** switch the main power **OFF** into the home at the main circuit breaker box and also switch **OFF** the main power to the Power Center.

1. **CAUTION! Switch the power OFF to the Power Center.**
2. Unlatch the front door latch and open the front door.
3. Remove the two (2) retaining screws securing the high voltage cover-panel. Remove the HIGH VOLTAGE COVER PANEL from the enclosure (see illustration on page 5).
4. Rewire the system transformer for 240 VAC as shown in the wiring diagram below.
5. Install the high voltage cover panel and secure it with the two retaining screws.
6. Close the enclosure front door and secure with the latch.

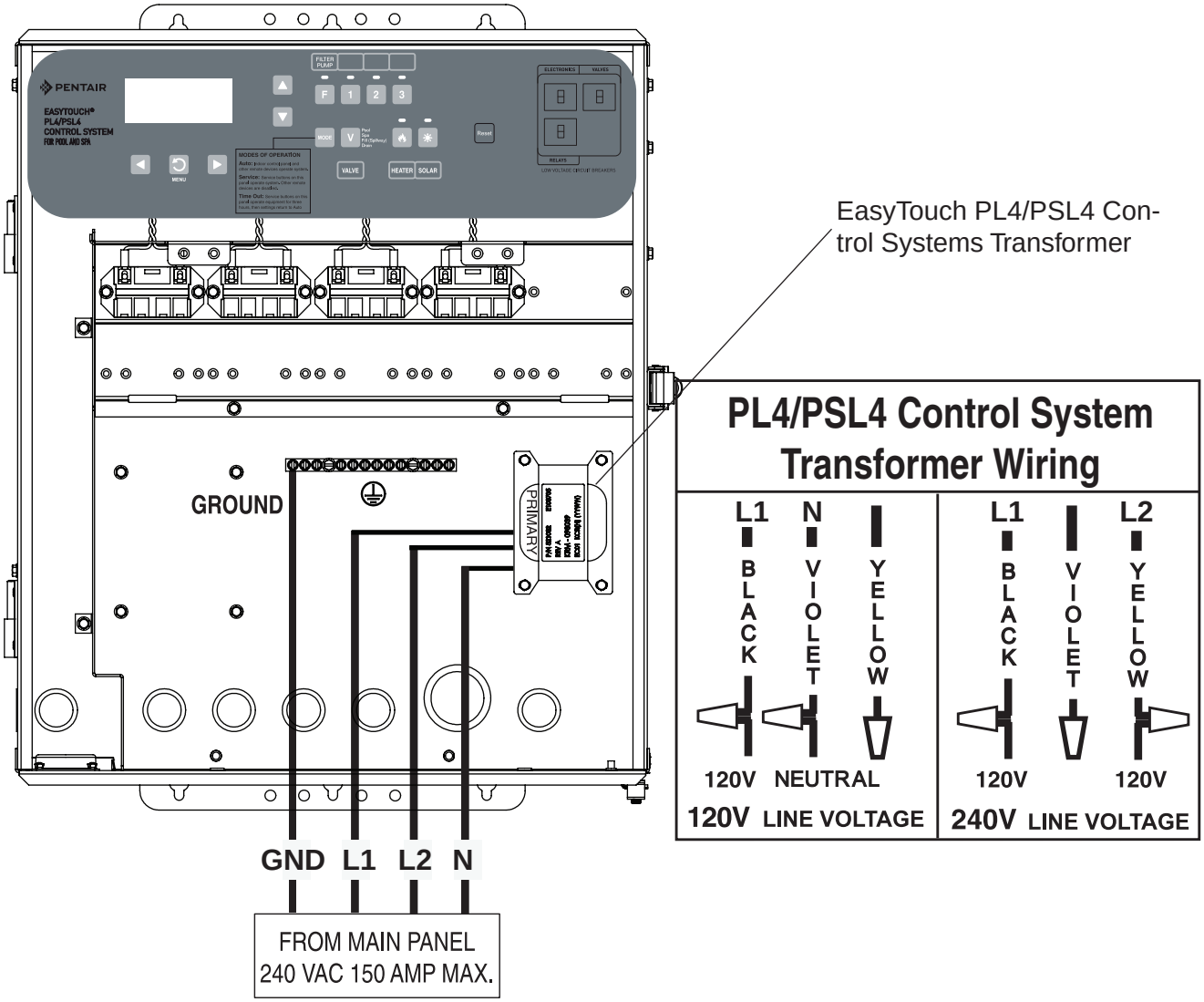

EasyTouch® PL4/PSL4 Control Systems Indoor Control Panel Installation

Use the following procedure to install the EasyTouch PL4/PSL4 Control Systems Indoor Control Panel. Read through the installation procedure before starting.

The PSL4 Control System Indoor Control panel provided one touch controls for your pool, spa, lights and other functions from inside your home or a sheltered location. Select a convenient wall location inside your the house or other weather-protected location for mounting the control panel.

Drill control panel wall mounting holes

To drill the control panel mounting holes (see diagram on next page):

1. The control panel is 5¾” wide. Using the cutout template (shown on the following page), mark the two screw locations on the wall for the mounting holes. Drill the two mounting holes. If the screws are not being screwed into studs, drill 3/16” holes and insert wall anchors as required.
2. Drill a 1 inch hole in the area shown in the template for the communication cable to feed through.

EasyTouch® PL4/PSL4 Control Systems Indoor Control Panel Cut-Out Template

Cut out template along dotted lines.

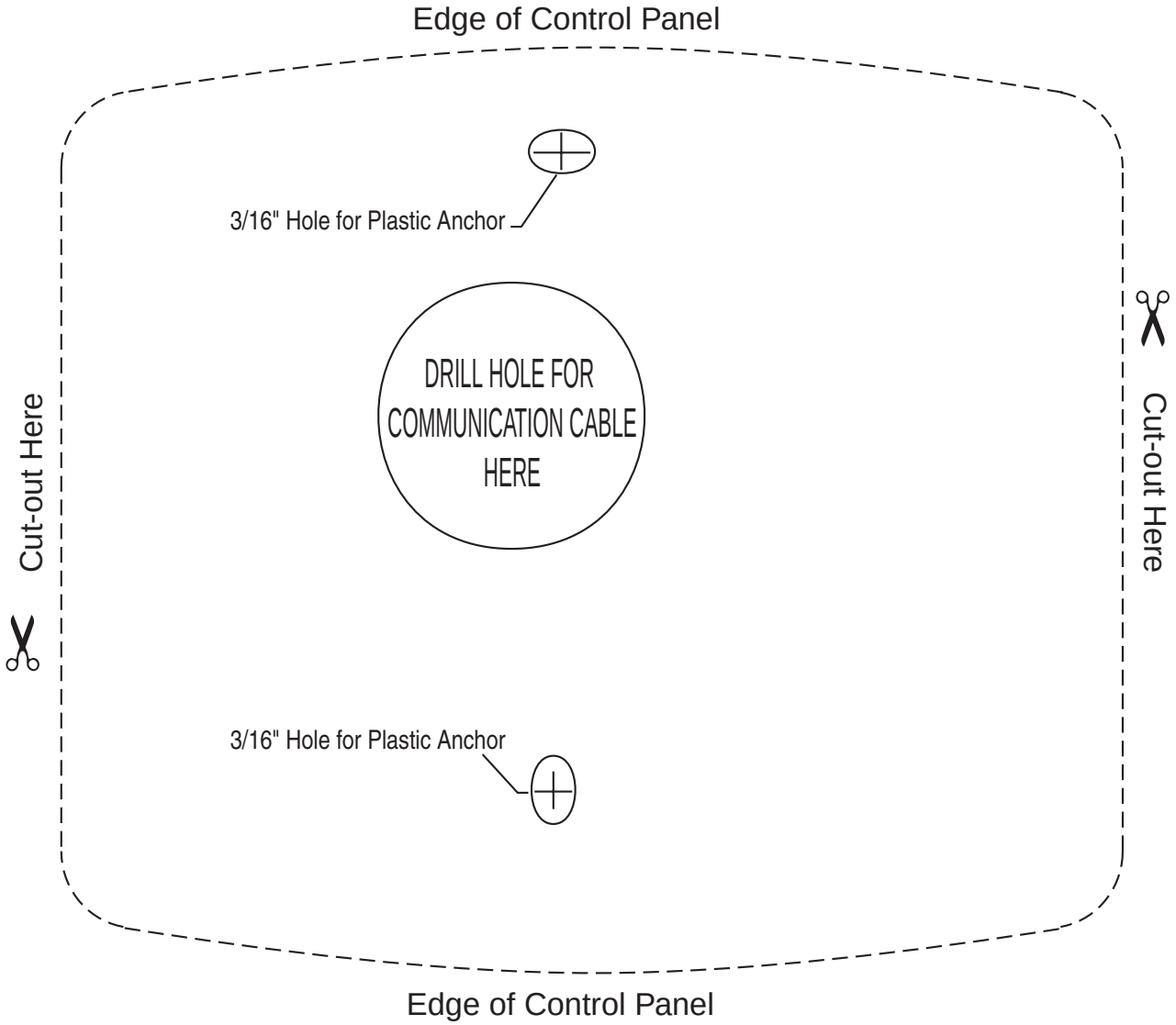

EasyTouch PL4/PSL4 Control Systems Indoor Control

Cabling the Indoor Control Panel at the Power Center

To connect the indoor control panel cable to the board:

1. Turn off the main system power before making any connections.
2. Run a UL approved four conductor cable (22 AWG) from the indoor control panel to the Power Center. The preferred wire color scheme is: Red, yellow, green, and black.
3. Route the cable up through the low voltage raceway to the motherboard.
4. Strip back the communication cable conductors ¼ in. Insert the wires into the screw terminals (provided in the kit). Secure the wires with the screws. Make sure to match the color-coding of the wires: Red = +15, Yellow = +DT, Green = -DT, and GND = Black.
5. Insert the cable plug onto the **COM-PORT (J20)** connector.
6. Proceed with **Mount and Cable the Indoor Control Panel**, page 60.

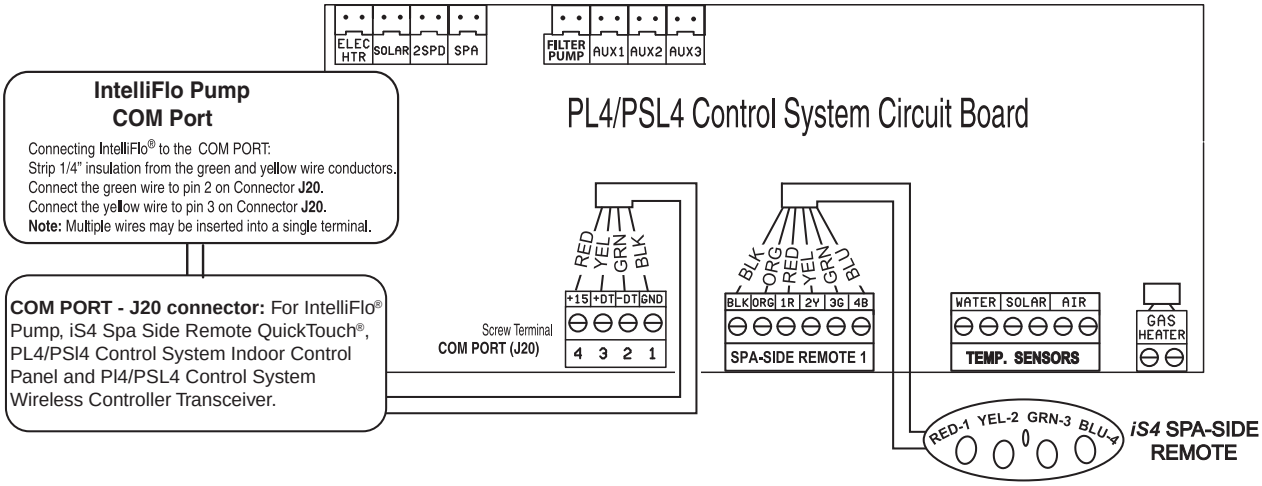

EasyTouch PL4/PSL4 Control Systems Circuit Board

Mount and Cable the EasyTouch® PL4/PSL4 Control Systems Indoor Control Panel

To mount and connect the communication cable to the EasyTouch PL4/PSL4 Control Systems Indoor Control Panel:

1. Route the cable through the house wall to the location of the indoor control panel. Pull a working length of the communication cable out of the wall.
2. **Remove the control panel front cover from the back plate**: Unsnap the bottom edge of the front of the control panel cover from the back plate.

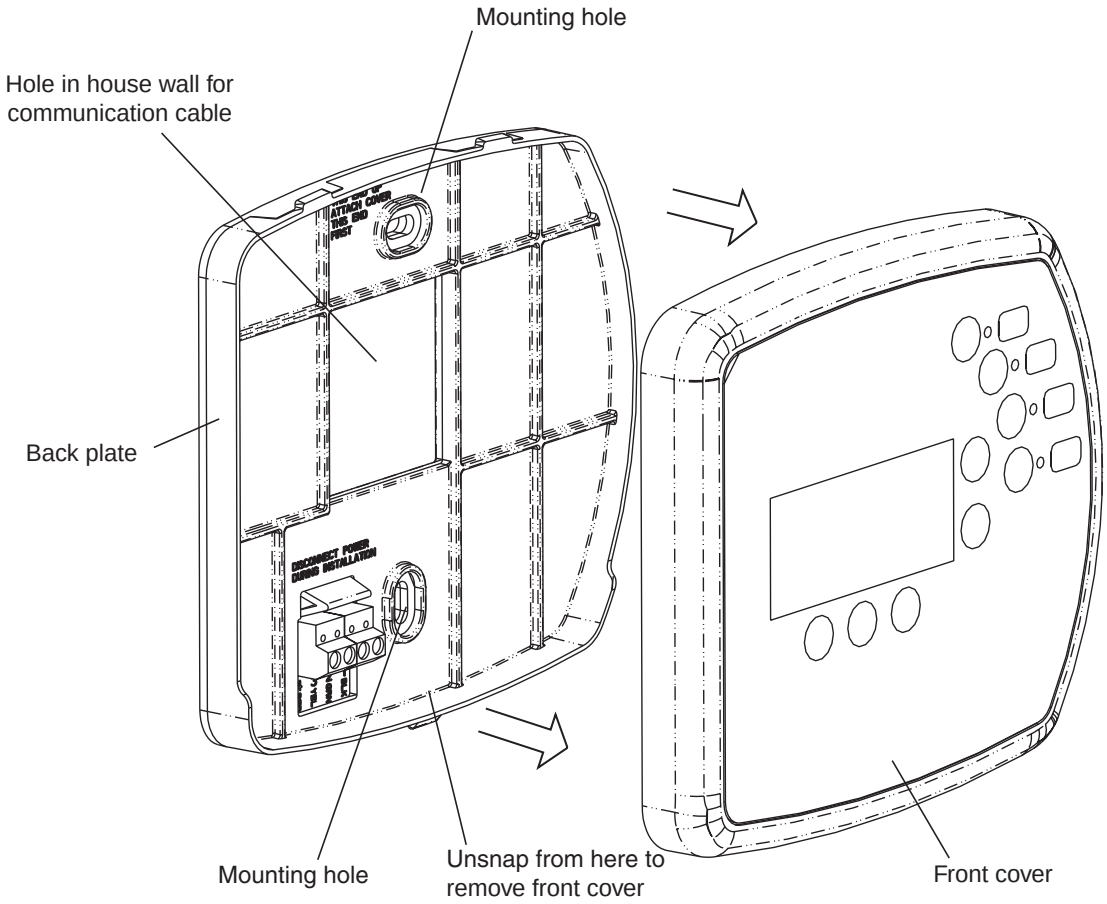

3. Strip the leads of the communication cable wires ¼ in. Insert the four wires into the screw terminals. Make sure to match the color-coding of the four wires as shown on the screw terminal.

4. Feed the cable back into the wall so that the remainder left outside the wall fits behind the back plate. Mount the control panel back plate on the wall. Secure the back plate with the two retaining screws.

5. Install two pan head retaining screws in the back plate holes. Tighten the two screws to secure the back plate on the wall.

6. Mount the control panel cover over back plate and snap in place to secure.

7. After the Power Center is powered up the indoor control panel will automatically synchronize system information from the outdoor control panel then the indoor control panel is ready for operation. Note: If “Unit Mismatch” display on the indoor control panel you have the choice to download the system image from the outdoor control panel or upload system information from the indoor control panel to the outdoor control panel. For more information about synchronizing control panels, see page 56.

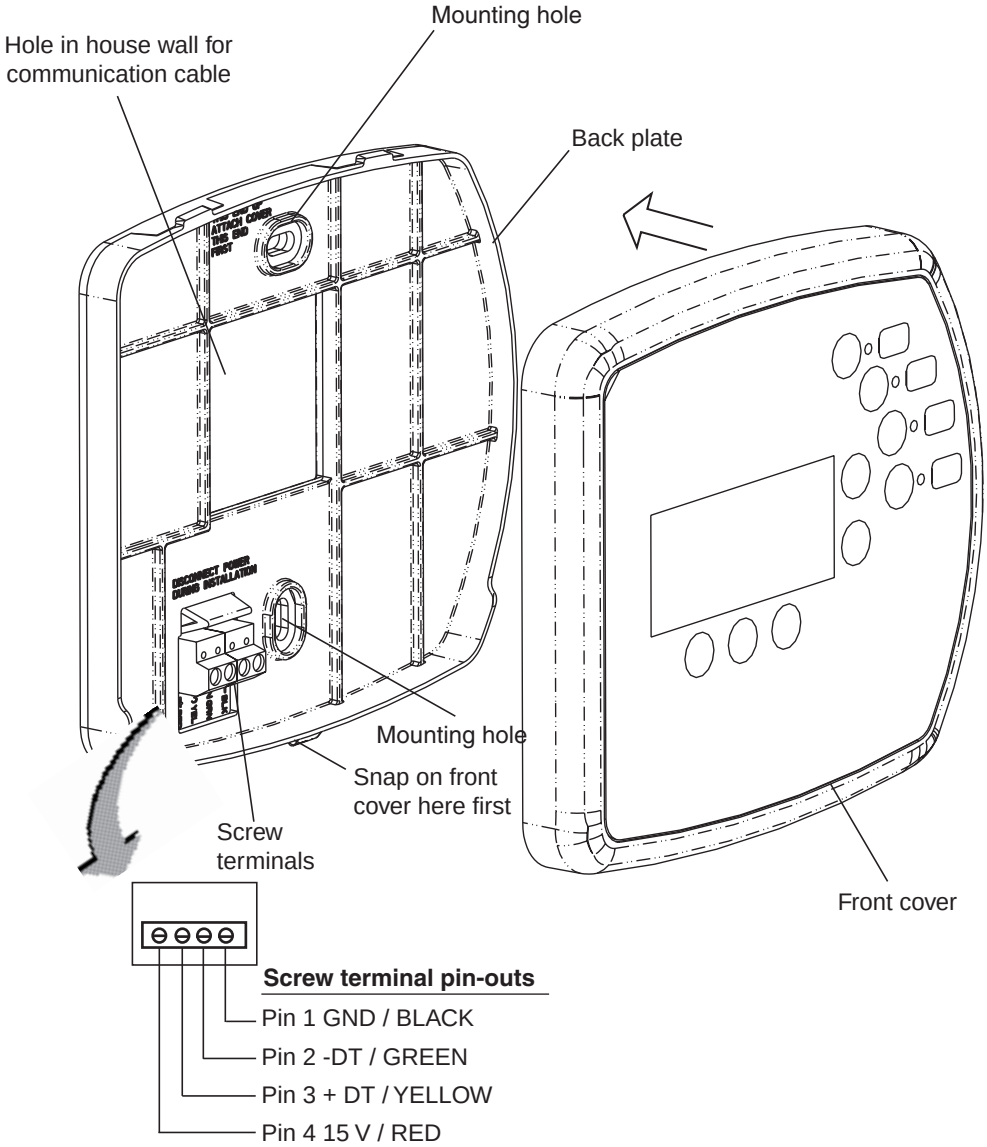

EasyTouch® PL4/PSL4 Control Systems Wireless Controller Transceiver Installation

Installing the Wireless Controller Transceiver

The following procedure describes how to install the EasyTouch PL4/PSL4 Control Systems Wireless Controller transceiver module and connect the transceiver cable to the COM port on the motherboard. Read through the installation procedure before starting.

EasyTouch PL4/PSL4 Control Systems Wireless Controller kit

The EasyTouch PL4/PSL4 Control Systems wireless control panel kit consists of:

- EasyTouch PL4/PSL4 wireless control panel
- Four AA-size alkaline batteries
- Transceiver module
- Four plastic anchors and retaining screws (to mount the transceiver module)

Mounting the Wireless Transceiver

The Transceiver is a two-way radio device with an attached antenna that communicates to and from the EasyTouch PL4/PSL4 Control Systems via the wireless hand-held wireless control panel. Mount the Transceiver module at a convenience location (on a flat vertical surface) near the Power Center, at a minimum of 5 ft. above ground level to optimize the functional operating range of the wireless control panel.

⚠ **CAUTION -** To avoid signal interference, mount the Transceiver antenna a minimum of 10 ft. away from the Power Center, any metal surface/structure, or air blower located in the immediate area of the equipment pad.

To mount the transceiver near the EasyTouch PL4/PSL4 Control Systems Power Center:

1. ⚠ **CAUTION - Switch the main power off at the EasyTouch PL4/PSL4 Control Systems Power Center.**
2. Remove the two retaining screws securing the transceiver case to the back plate. Carefully slide the case off the back plate.
3. ⚠ **CAUTION - Electrostatic Discharge (ESD): Hold the circuit board from the edges. Do not touch the board components, electrostatic discharge can damage the board.** Slide the transceiver circuit board up and out of the back plate.
4. Position the back plate against the mounting surface so that the case is oriented in an upright position (with the antenna pointing upwards). Use a pencil to mark the four mounting points. Drill four 3/16 in. diameter holes into the mounting surface. If screws are not being used, insert the four plastic wall anchors (provided in the kit).
5. Feed the provided 10 ft. of UL approved four 22 AWG conductor cable through the knockout hole at the bottom of the enclosure. Do not run wire through the drain holes. If the knockout hole is not being used to run wire through, drill a hole through the bottom of the back plate, route the wire through the hole and seal it using a fitting with a few feet of conduit or some other sealant between the case and the cable.

6. Position the back plate over the mounting points and secure it with the four mounting screws (provided in the kit).
7. Carefully slide the transceiver circuit board into the back plate.
8. Strip the leads of the communication cable wires back ¼ in. Insert the wires into the connector screw terminals (provided in the kit). Using a small flat-blade screwdriver, secure the wires with the terminal screws. Make sure to match the color-coding of the wires: GND = Black, Green = -DT, Yellow = +DT, and Red = +15. Connect the screw terminal connector onto the transceiver circuit board.
9. Slide the case over the back plate. Secure the case to the back plate using the two retaining screws.
10. Proceed with "**Connecting the Transceiver to the EasyTouch PL4/PSL4 Control Systems Power Center**," on page 67.

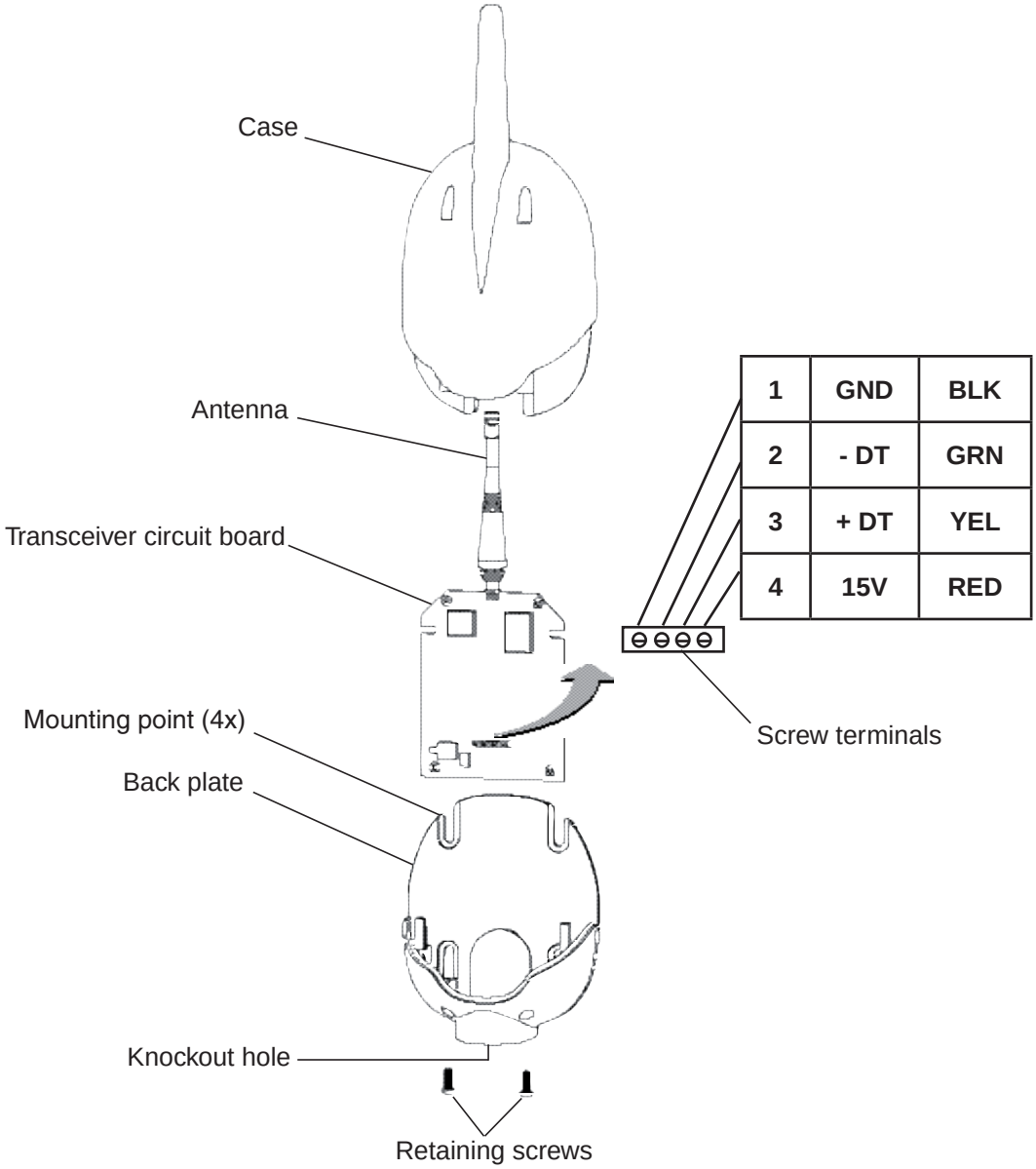

1	GND	BLK
2	- DT	GRN
3	+ DT	YEL
4	15V	RED

Transceiver Module

Connecting the Transceiver to the EasyTouch® PL4/PSL4 Control Systems Power Center

WARNING - Switch OFF the main system power to the EasyTouch PL4/PSL4 Control Systems Power Center before making any connections.

1. Unlatch the enclosure door spring latch, and open the enclosure door.
2. Remove the two retaining screws securing the high voltage cover panel, and remove it from the enclosure.
3. Loosen the two access screws securing the control panel.
4. Lower down the hinged control panel to access the susyem circuit board.
5. Route the four conductor transceiver connection cable into the lower plastic grommet, up through the low voltage raceway to the system circuit board.
6. Strip back the cable conductors ¼ inch. Insert the wires into the screw terminals (provided in the kit). Secure the wires with the screws. Make sure to match the color-coding of the wires:
   GND = Black, Green = -DT, Yellow = +DT, and Red = +15
7. Insert the screw terminal connector onto the **COM-PORT (J20)** connector on the motherboard. Note: Multiple wires may be inserted into a single screw terminal.

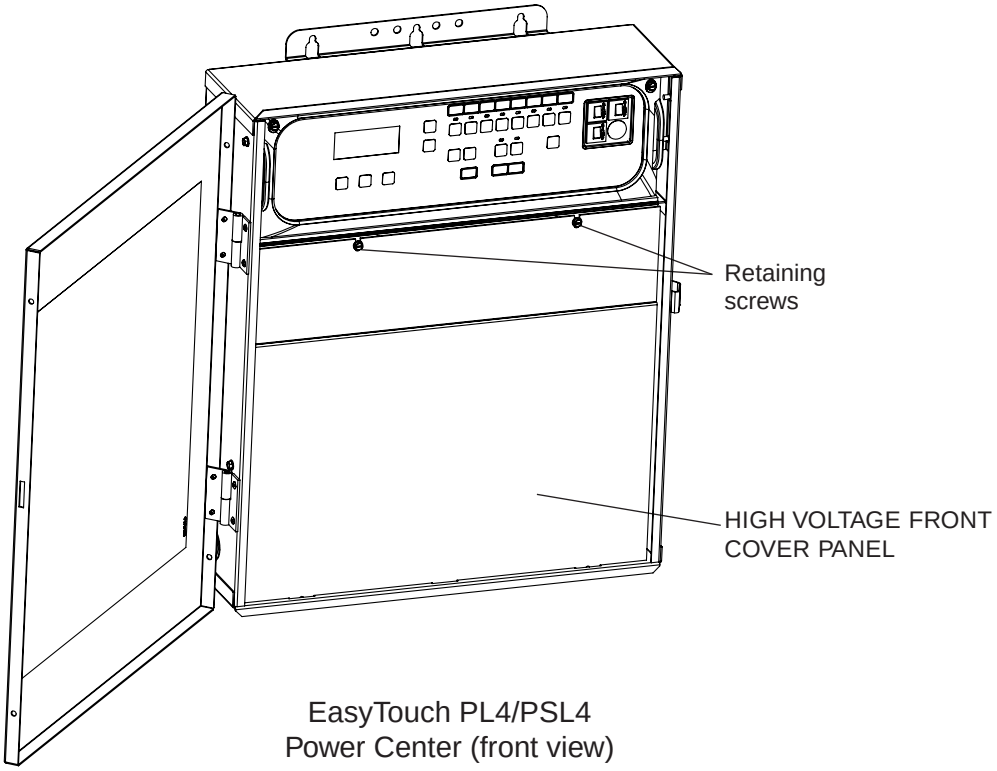

EasyTouch PL4/PSL4
Power Center (front view)

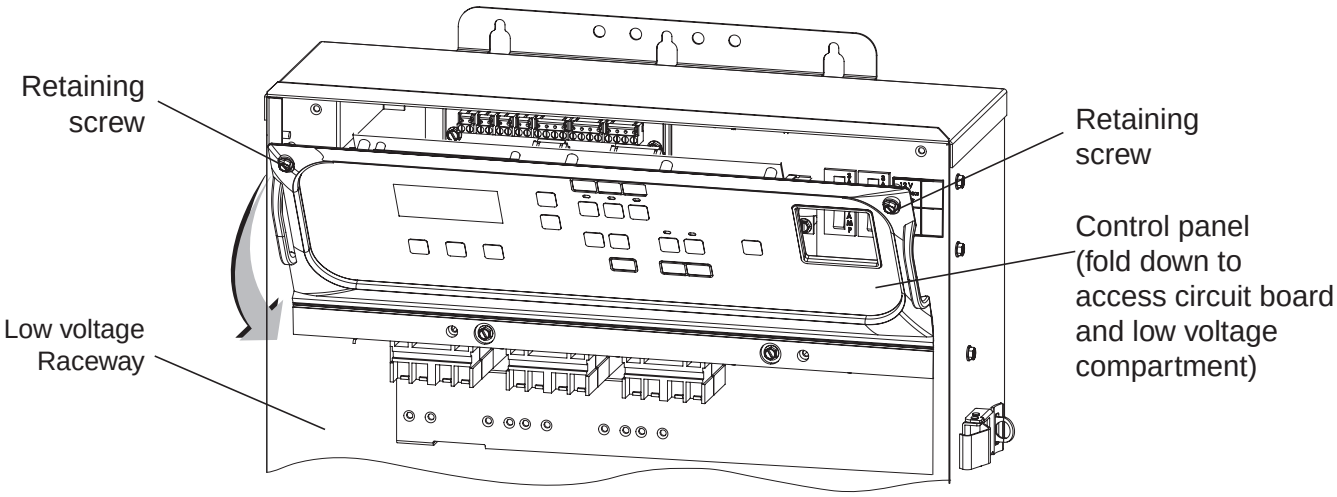

EasyTouch® PL4/PSL4 Control Systems Power Center (front view)
(front door and high voltage compartment panel removed)

8. Close the control panel into its original position and secure it with the two access screws.
9. Install the high voltage cover panel and secure it with the two retaining screws.
10. Close the Power Center front door. Fasten the two spring latches.
11. Switch the power on to the Power Center.

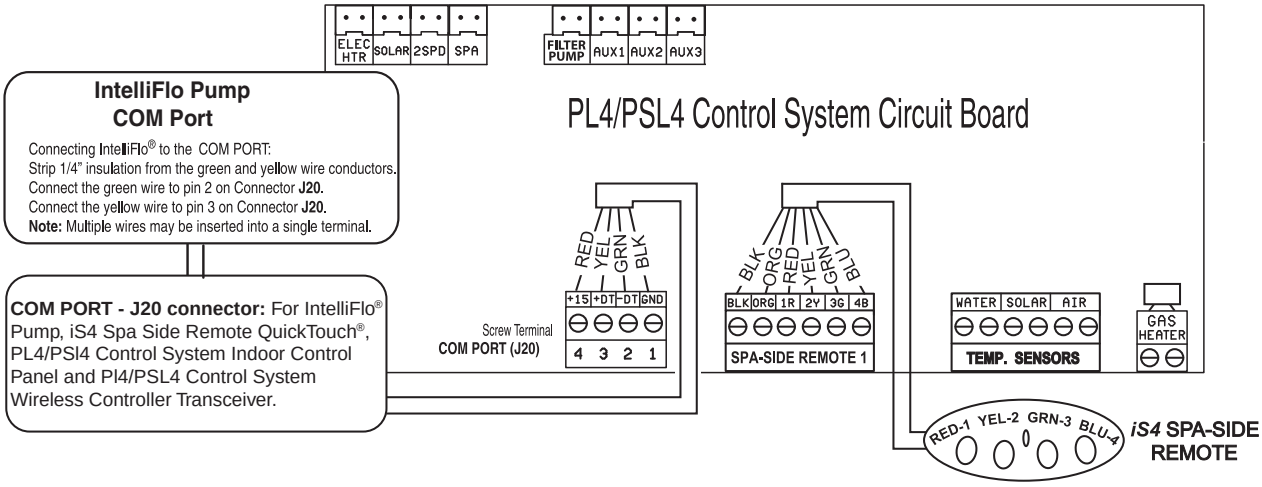

EasyTouch® PL4/PSL4 Control Systems Model Part Numbers

EasyTouch PL4/PSL4 Control Systems MODEL PART NUMBERS

522352	PL4 - Single Body / Base System (no Indoor Control Panel, no actuators)
522353	PL4 - Single Body / ScreenLogic® Bundle (no Indoor Control Panel, no actuators)
522354	PSL4 - Pool/Spa / Base System (no Indoor Control Panel, two actuators)
522355	PSL4 - Pool/Spa / ScreenLogic® Bundle (no Indoor Control Panel, two actuators)

CANADIAN EasyTouch PL4/PSL4 Control Systems MODEL PART NUMBERS

522352	PL4 - Single Body / Base System (no Indoor Control Panel, no actuators)
522353	PL4 - Single Body / ScreenLogic® Bundle (no Indoor Control Panel, no actuators)
522354	PSL4 - Pool/Spa / Base System (no Indoor Control Panel, two actuators)
522355	PSL4 - Pool/Spa / ScreenLogic® Bundle (no Indoor Control Panel, two actuators)
520911	IntelliChlor® Salt Chlorine Generator IC20 cell (Canada)
520912	IntelliChlor® Salt Chlorine Generator IC40 cell (Canada)

EasyTouch® PL4/PSL4 Control Systems Start-Up

Perform the following start-up procedures to ensure that the EasyTouch PL4/PSL4 Control Systems power center is installed correctly. If you need more detailed operating information, refer to the EasyTouch PL4/PSL4 Control Systems User's Guide (P/N 521044).

Before you power up the EasyTouch PL4/PSL4 Control Systems power center check the following:

Check Electronics

Check that the following plugs are seated correctly on the motherboard:

- Relay connectors - **FLTR PUMP** - **AUX1 - AUX3**
- Temperature sensors connectors **WATER, SOLAR, AIR**
- Transformer conductor harness **(J1)** attached to the motherboard.
- Heater control connector **ELEC HTR** or two-conductor screw terminal.

Refer to Summary Installation Steps (page 2) and EasyTouch PL4/PSL4 System Wiring Diagrams, on page 23.

EasyTouch PL4/PSL4 Control Systems Test

The following describes how to test the main control panel to activate the heater, valves and pumps. Before testing the system, be sure that all pool and spa equipment has been properly installed and connected to the EasyTouch PL4/PSL4 Control Systems Power Center.

Testing Valve Actuators and Filter Pump

Use the following steps to test the valve actuators (CVA24T) for proper rotation.

To test the valve actuators and pump:

1. Power up the EasyTouch PL4/PSL4 Control Systems power center.
2. Press the **Mode** button on the main control panel. The display shows "SERVICE".
3. Press the **Valve (V)** button to select **POOL.**
4. Press the **Filter Pump (F)** button to activate the filter pump. Water will be removed from the pool and returned to the pool.
5. Repeat steps 3 and 4 selecting **Fill (Spillway)** then **Drain**.
6. Set both valve actuators (CVA-24T) for suction and return. Use the toggle switch on the rear of the CVA-24T to withdraw and return water from the pool.

   Note: With the filter pump operating, if the water is not being removed and returned to the pool, check that the valve actuator plugs are connected correctly on the motherboard.

Testing the auxiliary relays

Affix the auxiliary relay labels to the appropriate AUX buttons on the EasyTouch PL4/PSL4 Control Systems control panel to identify the connected equipment.

- Press the **Mode** button to enable "Service" pool mode. Press the Filter Pump button (LED on) and each auxiliary (AUX) circuit button, the Heater and Solar buttons to verify the functions. Press the **Mode** button twice to return the system to **"AUTO"** mode when done.

EasyTouch® PL4/PSL4 Control Systems Circuit Board Connections

The EasyTouch PL4/PSL4s Control System circuit board is mounted in the top of the Power Center. The circuit board provides the voltage connections to the filter pump, heater, auxiliary relays, motorized valves and for temperature sensors. The COM port on the EasyTouch PL4/PSL4 circuit board provides connection to the EasyTouch PL4/PSL4 Control Systems indoor control panel,

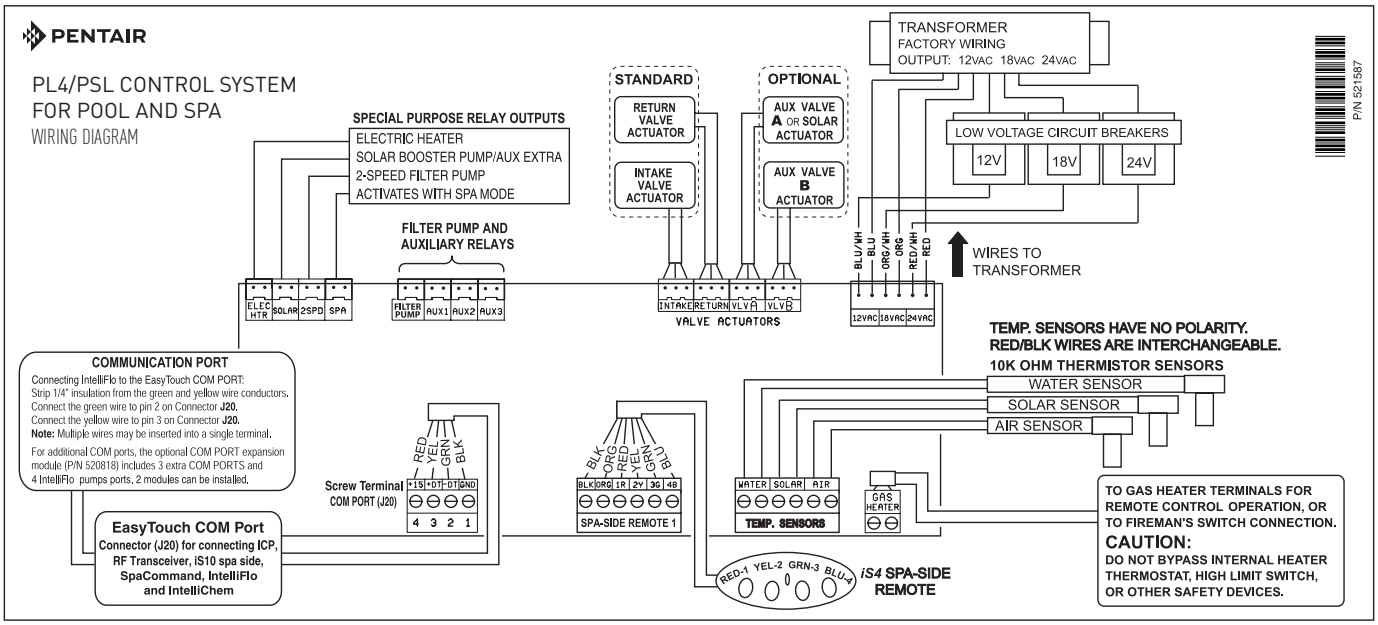

EasyTouch® PS4/PSL4 Control System Outdoor Circuit Board Connections

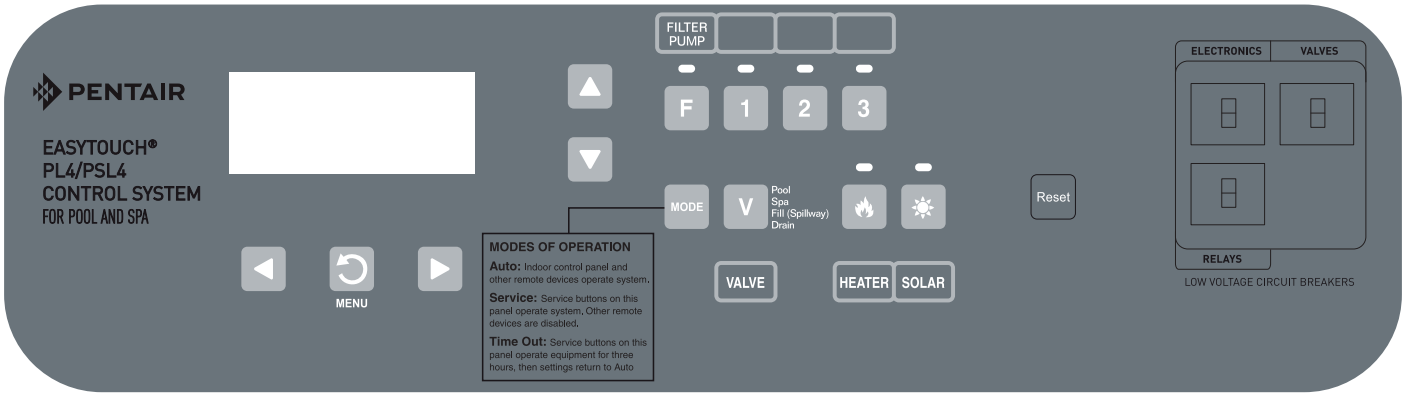

EasyTouch PL4/PSL4 Control Systems Outdoor Control

WARNING **PREVENT ELECTROCUTION**
INSTALL AT LEAST 5 FEET (1.2m) FROM INSIDE WALL OF POOL OR SPA.

AVERTISSEMENT **ÉVITER TOUT RISQUE D'ÉLECTROCUTION**
INSTALLER AU MOINS 1.5 MÈTRES DU MUR INTÉRIEUR DE LA PISCINE OU DU SPA.

DISCONNECT ALL SUPPLY CONNECTIONS BEFORE SERVICING. THIS APPLIANCE MAY HAVE UP TO 11 SUPPLY CONNECTIONS.

DÉBRANCHER TOUTES LES CONNEXIONS AVANT DE TRAVAILLER SUR CETTE UNITÉ. CET APPAREIL PEUT AVOIR JUSQU'À 11 CONNEXIONS DE L'ALIMENTATION.

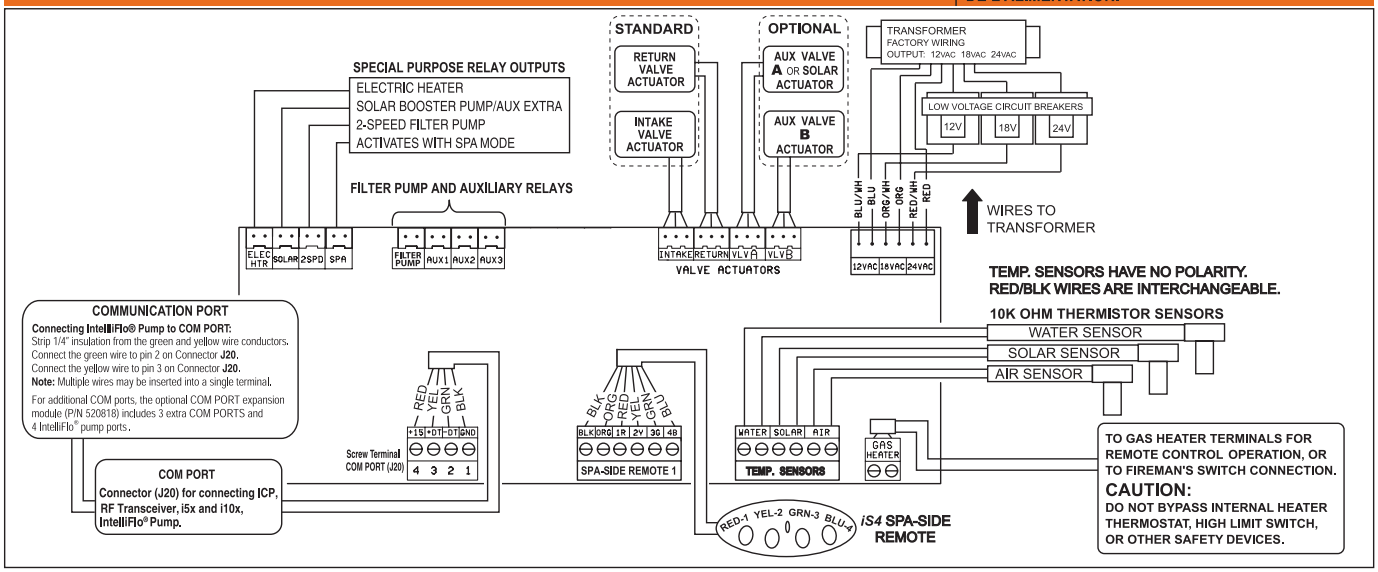

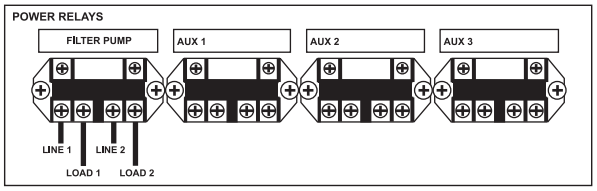

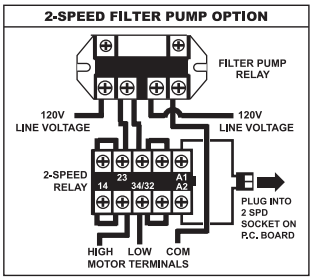

PREVENT WATER DAMAGE

KEEP DOOR CLOSED

A disconnecting means must be located within sight from the equipment and at least 5 feet (1.52 m) from the inside walls of the pool, spa or hot tub.

CONTROL TRANSFORMER WIRING

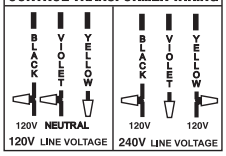

RELAY CONTACT OUTPUT	
General: 25A, 277VAC	
PUMP	LIGHT
1.5 HP 120 VAC	1.5 KW 120 VAC TUNGSTEN
3 HP 277 VAC	4.8 KW 240 VAC TUNGSTEN
20 FLA/120 LRA, 120 VAC	20A, 277 VAC BALLAST
17 FLA/102 LRA, 277 VAC	

CAUTION: RISK OF ELECTRIC SHOCK, READ INSTALLATION MANUAL

IMPORTANT: This Control Panel must be installed in compliance with the National Electrical Code (NFPA 70) including article 680, as well as all local Authority Having Jurisdiction requirements. Mount enclosure with conduit holes down. This control is not provided with integral GFCI protection for the lighting circuit. When this control is used to power or switch an underwater luminaire, suitable GFCI protection shall be provided in the field. Follow manufacturers' instructions for installing and testing of Ground Fault Circuit Breakers (GFCB) and Interrupters (GFCI); (Canada Class A GFCI). An APPROVED GFCI duplex receptacle may be installed in the rectangular knockout provided on the right side of the enclosure. If the panel is installed outdoors, an APPROVED TYPE 3R (RAINPROOF) Cover MUST be installed over the wiring device in the rectangular opening. Make sure connections inside the low voltage compartment are well insulated, connectors properly seated and wiring lugs tightened. After wiring is completed, install front panel over wiring compartment opening.

WARNING
DO NOT USE AN EASYTOUCH® OR INTELLITOUCH® SYSTEM TO CONTROL AN AUTOMATIC POOL COVER. SWIMMERS CAN BECOME ENTRAPPED UNDER THE COVER, WHICH COULD RESULT IN INJURY AND/OR DEATH.

TYPE 3R "Rainproof" (IPX3).
Enclosure suitable for INDOOR or OUTDOOR USE.
Pour une utilisation en intérieue comme en extérieue.
Control Panel suitable for SWIMMING POOL/SPA applications.
Electrical Rating: 120/240VAC 150 AMP Single Phase (3 Wire).
The input line to this control panel should be protected by a 240VAC circuit breaker rated at NO MORE than 150 Amperes maximum.
Control Transformer Input: 120VAC, 2A; 240VAC, 1A, 50/60Hz.
SCG Transformer Input (if equipped): 120VAC, 2.5A; 240 VAC, 1.3A, 50/60 Hz.
Short Circuit Current Rating: 5000 RMS SYMMETRICAL AMPERES.
Use COPPER CONDUCTORS ONLY.
Use 14 AWG to 6 AWG, 60˚/75˚C Copper conductors for all field wiring.

PENTAIR

PL4/PSL4 CONTROL SYSTEM
FOR POOL AND SPA

c UL us
LISTED
POOL/SPA CONTROLLER
5K42

P/N 522427-A

Sanford NC • Moorpark CA — Customer Service 800-831-7133

EasyTouch PL4/PSL4 Control Systems Wiring

System Start-Up

The following information describes basic start-up procedures. For more detailed troubleshooting information, refer to the EasyTouch PL4/PSL4 Systems User's Guide (P/N 522561). Before you power up the Power Center check the following:

Check Electronics

Check that the following plugs are seated correctly on the Personality board:

- Relay connectors - **FLTR PUMP** - **AUX1 - AUX3**
- Temperature sensors connectors **WATER, SOLAR, AIR**
- Transformer conductor harness **J1** attached to the EasyTouch PL4/PSL4 Control Systems circuit board.
- Heater control connector **ELEC HTR** or two-conductor screw terminal.

Refer to Summary Installation Steps (page 5) and Power Center System Wiring Diagrams, on page

System Test

The following describes how to test the Outdoor Control Panel to activate the heater, valves and pumps. This test assumes that all system equipment has been properly installed and connected to the Power Center.

Testing Valve Actuators and Pumps

Use the following steps to test the valve actuators (CVA24T) for proper rotation for PSL4 Control System (shared equipment).

To test the valve actuators and pump:

1. Power up the Power Center.
2. Press the **MODE** button on the Outdoor Control Panel until the **SERVICE** is displayed on the screen.
3. Press the **V (Valve)** button to select **POOL.**
4. Press the **F (Filter Pump)** button to activate the filter pump. Water will be removed from the pool and returned to the pool.
5. Set both valve actuators (CVA-24T) for suction and return. Use the toggle switch on the rear of the CVA-24 to withdraw and return water from the pool.

   Note: With the filter pump operating, if the water is not being removed and returned to the pool, it may be necessary to reverse the **RETURN** with **INTAKE** plugs on the EasyTouch PL4/PSL4 Control Systems circuit board.

Testing the auxiliary relays

Affix the auxiliary relay labels to the appropriate buttons on the EasyTouch PL4/PSL4 Control Systems control panel. If necessary, write the function on the control panel.

- Toggle the filter pump, each auxiliary circuit, heater and solar and verify the function. Press the SYSTEM CONTROL button to set the system in **"AUTO"** mode when done.

Solar System Installation

- To ensure maximum flow of water through the solar panels, a solar booster pump should be added if panels are installed at a very high elevation.
- It is recommended that the solar panels are mounted in a way that gravity will allow draining whenever the filter pump is not on.
- For systems with glazed panels, damage can occur from overheating if the filter pump is still running after the solar has turned off. To enable glazed panels to automatically drain whenever the solar turns off (even if the filter pump is still running), a 1/2" motorized solar drain valve should be plumbed from the solar feed line, through a check valve, to a zero psi point (such as pool fill line or jet air intake).

Solar System Start-Up

1. Switch power on to the EasyTouch® PL4/PSL4 Control Systems Power Center.
2. If pool cleaner protection has been added to the system, the pool cleaner pump motor should be activated whenever the pool cleaner timer is on. Momentarily turn pool cleaner on and off to check the motor is operating correctly.
3. Check that Solar Valve is in "solar bypass" position, diverting water away from solar panels. If Solar Valve is staged incorrectly (diverting water to the solar panels), reverse switch on back of Valve Actuator (change from ON1 to ON2, or vice-versa). The Valve Actuator will automatically rotate to the correct position.
4. Check that Solar Valve has rotated from the "solar bypass" position to the "solar" position, diverting water through the solar panels.
5. The system is now ready to be operated as desired.

Pool Cleaner Protection

Recommended for use in pool systems which utilize a "booster pump" pool cleaner. This feature automatically turns off the pool cleaner pump for a few minutes whenever solar is initiated. This will protect the pump from damage caused by air in the solar panels at system start-up.

Installing the EasyTouch® PL4/PSL4 Control Systems Outdoor Control Panel

⚠WARNING BEFORE INSTALLING THE Power Center AND POWER CENTER, ALWAYS SWITCH OFF THE MAIN POWER into the home at the main circuit breaker box.

The EasyTouch PL4/PSL4 Control Systems Outdoor Control Panel installs in the top part of the Power Center enclosure. The control panel controls and distributes high voltage power to the valve actuators, control pumps, lights, and heater operations. The optional EasyTouch PL4/PSL4 Control Systems Indoor Control Panel, Wireless Controller, iS4 and QuickTouch® Controller also controls these and other functions, such as pool and spa lights.

To install the Outdoor Control Panel:

1. Unlatch the front door spring latch and open the front door of the Power Center enclosure.
2. Remove the two (2) retaining screws securing the high voltage cover-panel. Remove the HIGH VOLTAGE COVER PANEL from the enclosure (see page 37 for illustration).

Installing the EasyTouch® PL4/PSL4 Control Systems Outdoor Control Panel (Continued)

3. Remove the Outdoor Control Panel from its packaging.
4. Mount the Outdoor Control Panel in the top part of the Power Center. Secure the lower edge of the control panel with the two retaining screws. Once secured, the Control Panel can hinge out and down to access the circuiy board low voltage connections.
5. When finished connecting the low voltage connections on the circuit board, close the hinged control panel and secure it with the two retaining screws.
6. Install the cover-panel and secure it with the two retaining screws.

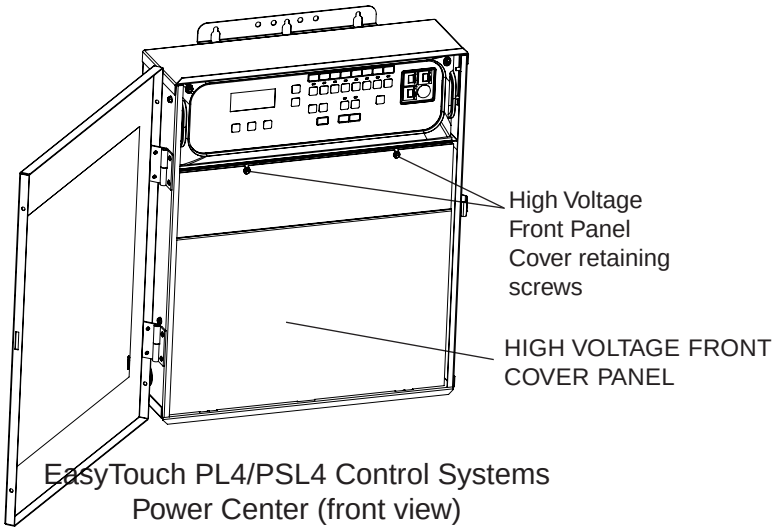

EasyTouch PL4/PSL4 Control Systems
Power Center (front view)

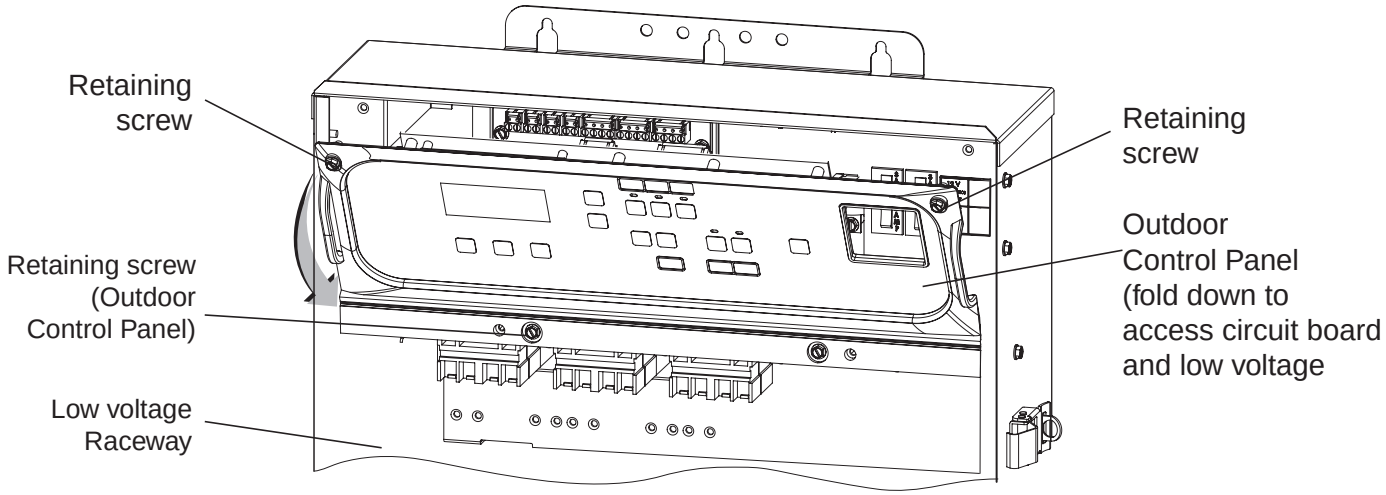

EasyTouch PL4/PSL4 Control Systems Power Center (front view)
(front door and high voltage compartment panel removed)

EasyTouch® PL4/PSL4® Control Systems Outdoor Control

For EasyTouch PL4/PSL4 Control Systems wiring diagrams, see pages 41-43.

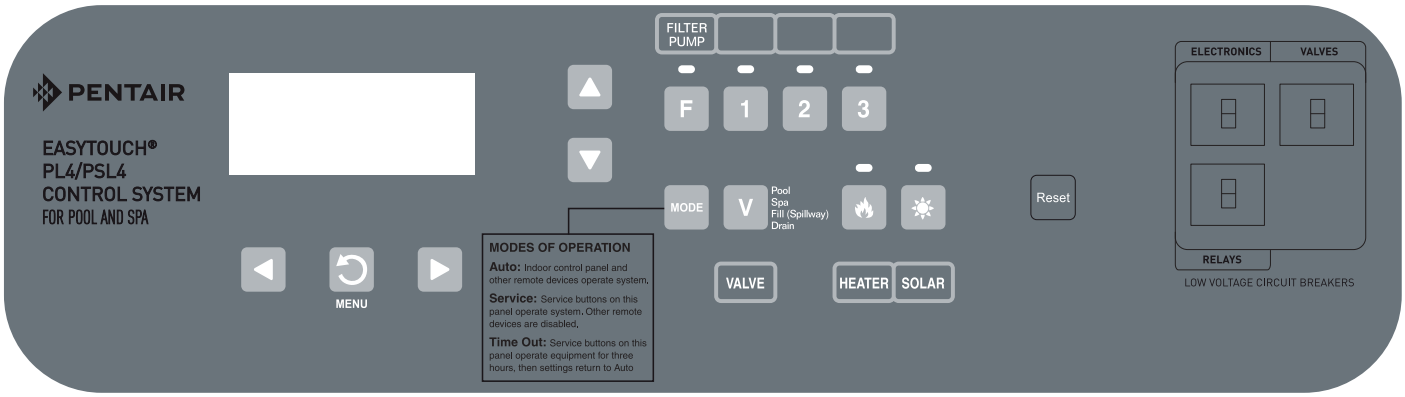

Shared Equipment Systems Model or Single Body Systems (no valves)

Wireless Controller (3 AUX circuits)
(P/N 520547) (Optional)

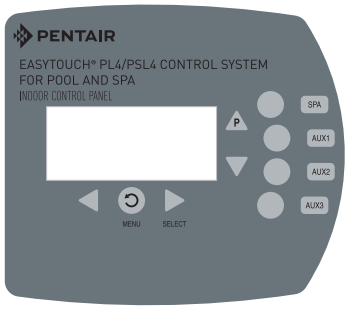

Indoor Control Panel (3 AUX circuits)
(P/N 520549 - Optional)

9. Plumb the solar feed and return lines between the filter and the heater. Install a three-port valve at the feed line. Use a solar valve (model SOL-2T), to allow automatic draining of the panels.

10. A solar booster pump should be used when the distance to the panels exceed 200 ft., or the panels are elevated higher than 25 ft.

11. Glazed solar panels require a drain valve (model HW-5B) to allow draining of the panels. This prevents damage from overheating water. Install a drain valve at the solar feed line and connect to the pool fill line.

12. **SCG systems only:** IntelliChlor IC40 or IC20 Salt Chlorine Generator cell with check valve at the heater output. Refer to IntelliChlor Salt Chlorine Generator User's Guide (P/N 520589) for plumbing requirements.

Equipment Location

All equipment, with the exception of the spa-side remote, must be located at least 10 ft. from the water's edge.

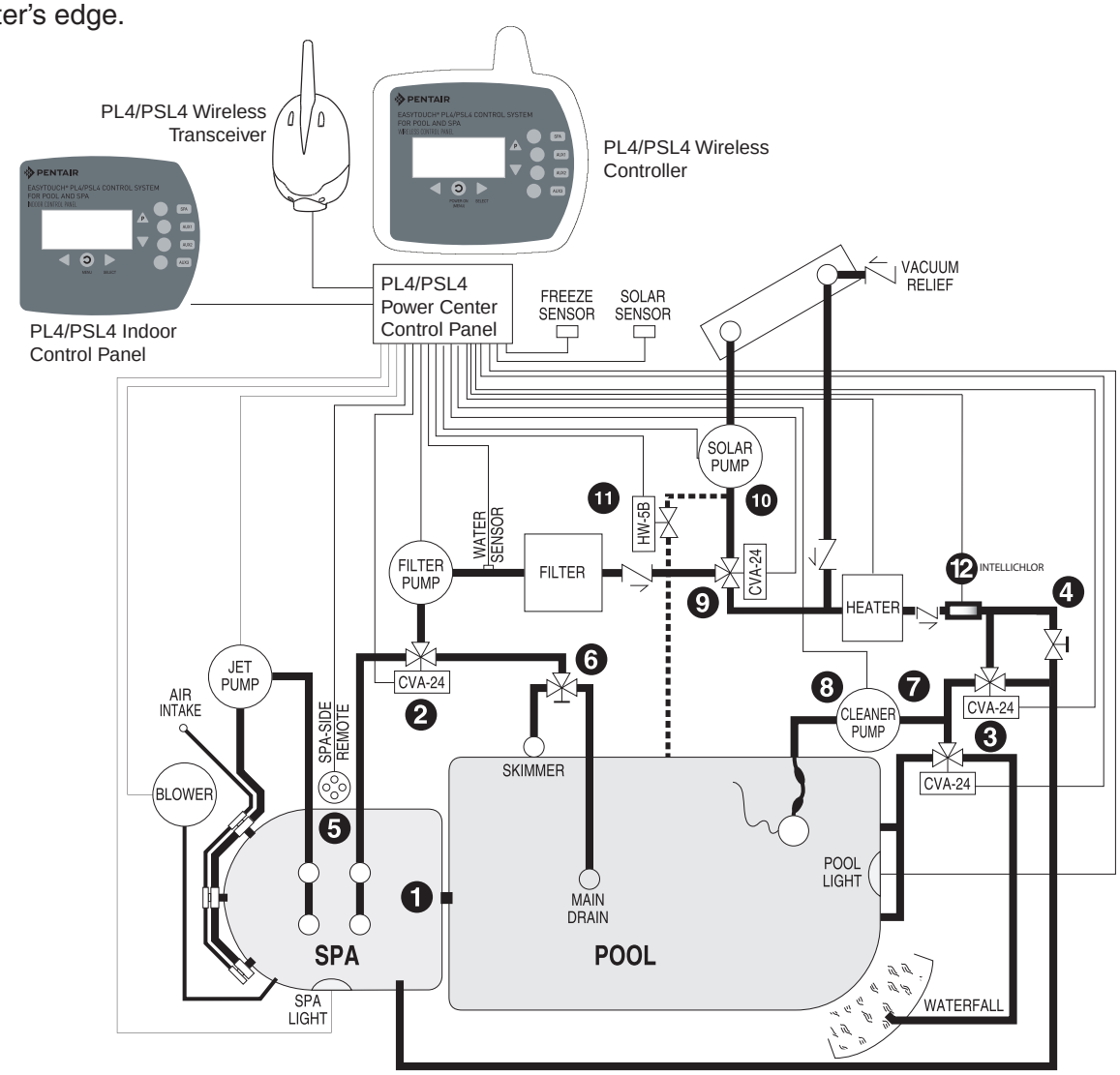

Recommended Hydraulic Schematic for Shared Equipment System

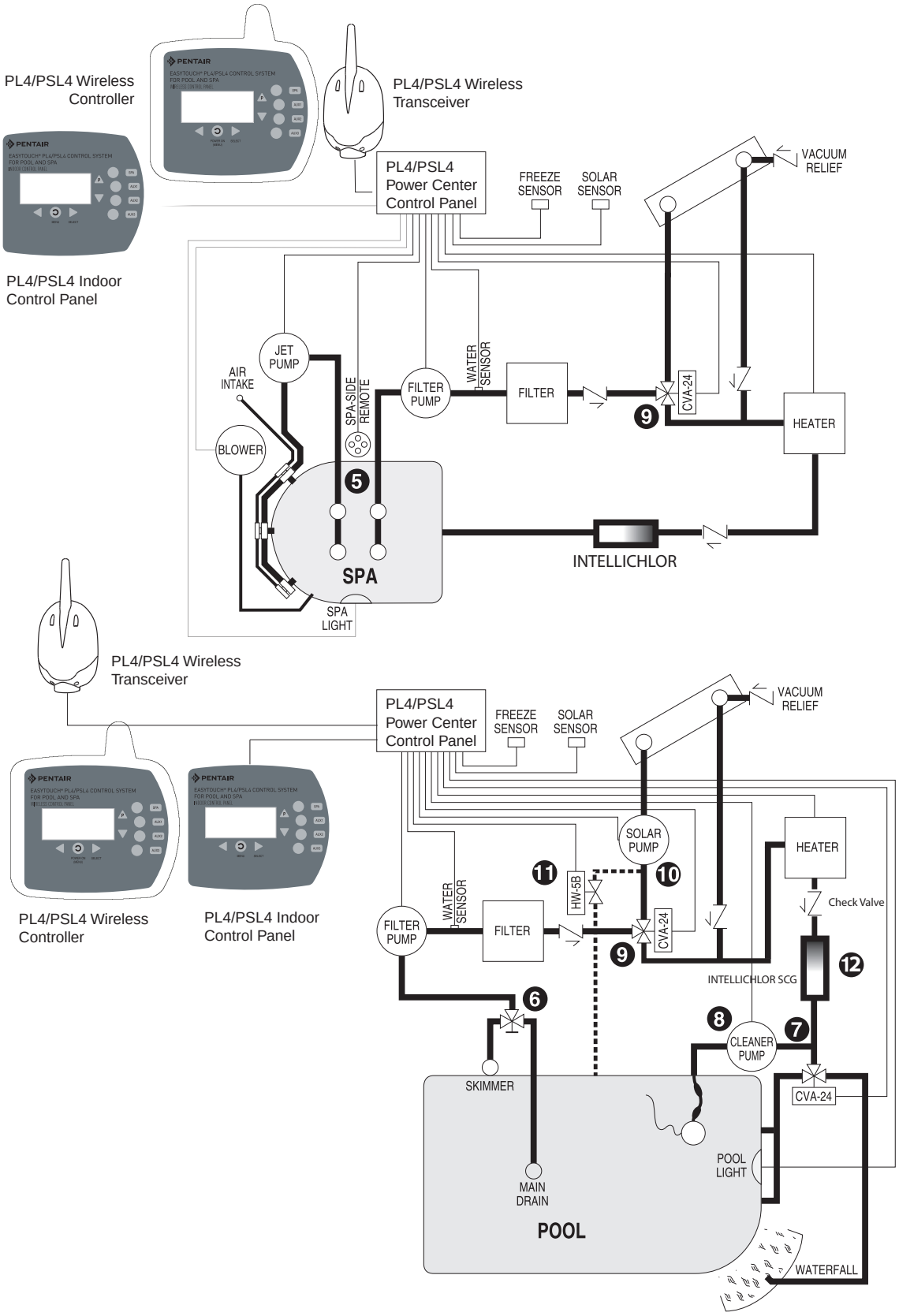

Recommended Hydraulic Schematic for Single Body System

Glossary

Control Panel: The EasyTouch PL4/PSL4 Control Systems Outdoor Control Panel with flexible hinge. Installed in upper portion of EasyTouch PL4/PSL4 Control Systems Power Center.

EMI (Electromagnetic interference) filter: Protective circuit element that must be used between the IntelliChlor transformer and supply lines.

High Voltage Panel/Compartment: Removable panel for the high voltage compartment of EasyTouch PL4/PSL4 Power Center. The high voltage wiring including circuit breakers, relays, GFCI and optional IntelliChlor transformer/filter.

Indoor Control Panel: This 9 or 13 button remote controller with LCD (liquid crystal display) is wired to the control circuit board in the EasyTouch PL4/PSL4 Control Systems Power Center. The control panel can be wall mounted inside a house to control the EasyTouch PL4/PSL4 system.

IntelliChlor® (SCG): Salt Chlorine Generator. Uses a process known as electrolysis to produce sodium hypochlorite (liquid chlorine) from a low concentration of salt added to the pool water. Model IC 20 Cell (P/N 520554) for pools up to 20,000 U.S. gallons (75 liters) and model IC 40 Cell (P/N 520555) for pools up to 40,000 U.S. gallons (151 liters). The external IntelliChlor Salt Chlorine Generator Power Center (P/N 520556).

iS4 Wireless Controller: Four function spa-side remote. Spa wall or deck mounted.

Power Center: Metal enclosure with power relays, transformer, and circuit breakers. Used for distributing power for controlling EasyTouch PL4/PSL4 Control Systems. Also known as the “sub-panel.”

Low Voltage Compartment: Top compartment of Power Center for all low voltage wiring.

Low Voltage Raceway: Vertical space in the left side of Power Center for low voltage cabling.

Motherboard: The circuit board mounted behind the EasyTouch Control SYstem PL4/PSL4 Control Systems control panel.

Relay Circuits: The circuits that control the relays on the motherboard. Connectors on top edge of the circuit board.

Screw Terminal Connector: Removable connector that may attach to circuit board with multiple sockets (anywhere from 2 to 6) to receive conductors from controllers and sensors; conductors held by screw terminals; multiple conductors of a small enough gauge (usually 22 AWG) may be coupled to a single socket of a terminal connector.

Salt Chlorine Generator (SCG): Automated pool chlorinator that sanitizes using salt water (see IntelliChlor Salt Chlorine Generator).

Glossary (continued)

Feature Circuits: Programmable circuits that may control relays and/or valve actuators. For details, see the EasyTouch PL4/PSL4 Control Systems Systems User's Guide (P/N 522461)

High Voltage Compartment: Large lower right compartment of Power Center for all high voltage wiring including circuit breakers, relays, and GFCI.

Indoor Control Panel: This EasyTouch PL4/PSL4 Control Systems remote controller with LCD (liquid crystal display) is wired to the Personality board (EasyTouch PL4/PSL4) or Motherboard (EasyTouch PL4/PSL4) in the Power Center. The control panel can be wall mounted inside a house to control the EasyTouch PL4/PSL4 Control Systems.

Low Voltage Compartment: Top compartment of Power Center for all low voltage wiring.

Low Voltage Raceway: Vertical space in the left side of Power Center for low voltage cabling.

Wireless Controller (EasyTouch PL4/PSL4 Control Systems): Wireless controller for the EasyTouch PL4/PSL4 Systems with all the functionality of the Indoor Control Panel.

Mud Box: Enclosure to provide mounting features for SpaCommand controller or iS10 spa-side remote that is cast into gunite, concrete, or other spa wall/deck construction.

Outdoor Control Panel: Control panel with flexible hinge installed in upper portion of Power Center to control EasyTouch PL4/PSL4 systems.

Power Center: Enclosure without circuit breaker base.

Relay Circuits: The circuits that control the relays on the EasyTouch PL4/PSL4 Control Systems circuit board.

Screw Terminal Connector: Removable connector that may attach to circuit board with multiple sockets (anywhere from 2 to 12) to receive conductors from controllers and sensors; conductors held by screw terminals; multiple conductors of a small enough gauge (usually 22 AWG) may be coupled to a single socket of a terminal connector.

Transceiver: Circuit board with attached antenna that can send and receive radio frequency (wireless) transmissions. Used with QuickTouch® II Wireless Controller.

Notes

Notes

1620 HAWKINS AVE., SANFORD, NC 27330 • (919) 566-8000
10951 WEST LOS ANGELES AVE., MOORPARK, CA 93021 • (805) 553-5000

www.pentairpool.com

All Pentair trademarks and logos are owned by Pentair or by one of its global affiliates. SunTouch®, EasyTouch®, QuickTouch®, IntelliChlor®, IntelliFlo®, IntelliChem®, Sta-Rite®, MiniMax®, MasterTemp®, WhisperFlo® and UltraTemp® are trademarks and/or registered trademarks of Pentair Water Pool and Spa, Inc. and/or its affiliated companies in the United States and/ or other countries. Hayward is a registered trademark of Hayward Industries Inc. Jandy is a registered trademark of Jandy Industries Inc. Unless expressly noted, names and brands of third parties that may be used in this document are not used to indicate an affiliation or endorsement between the owners of these names and brands and Pentair Water Pool and Spa, Inc. Those names and brands may be the trademarks or registered trademarks of those third parties. Because we are continuously improving our products and services, Pentair reserves the right to change specifications without prior notice. Pentair is an equal opportunity employer.

© 2015 Pentair Water Pool and Spa, Inc. All rights reserved. This document is subject to change without notice.

P/N 522460 REV. B 1/2015