PS ULTRA / PRO-SPRAY®

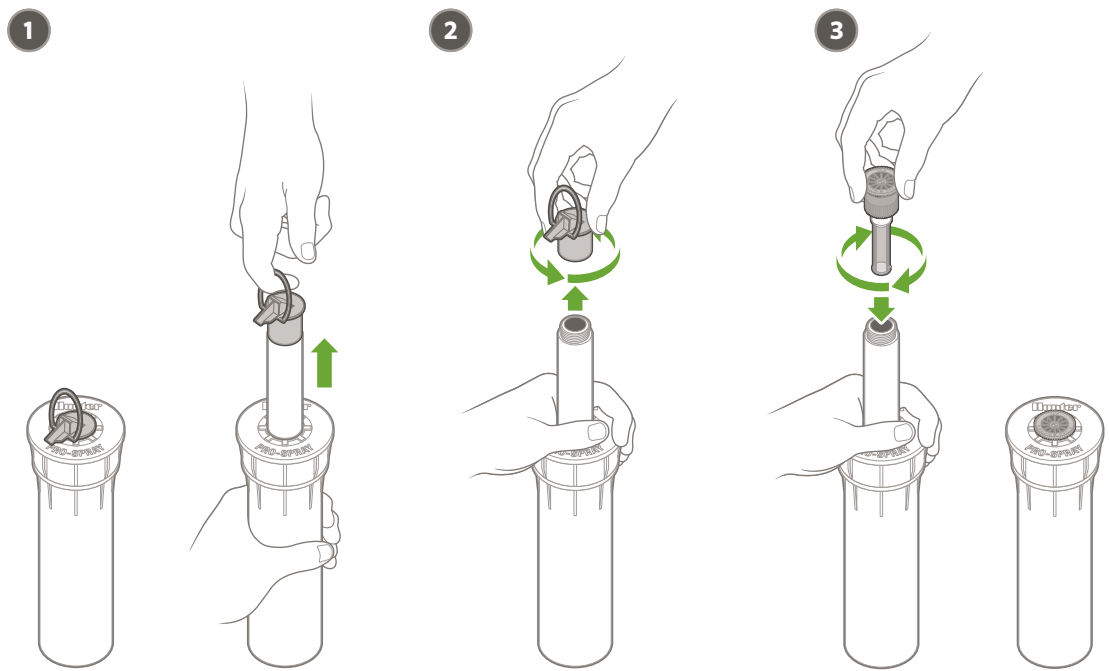

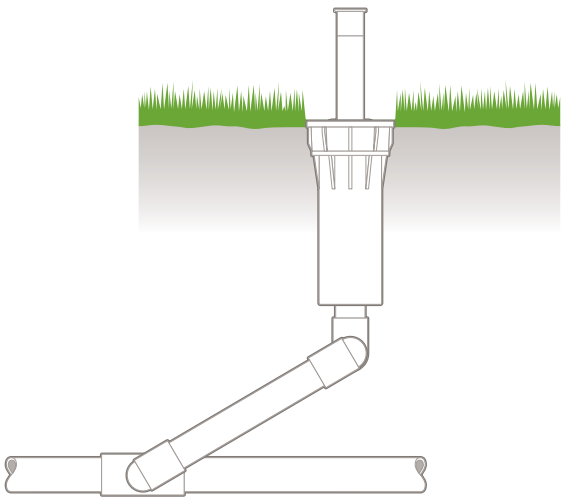

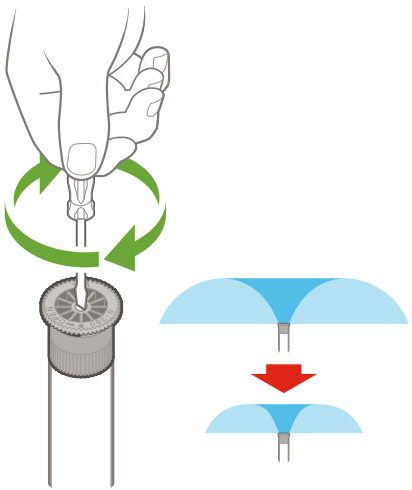

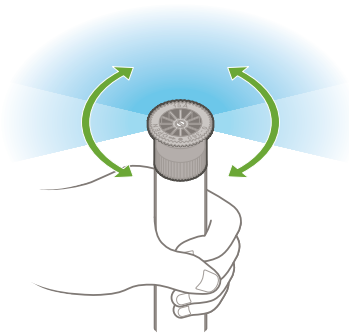

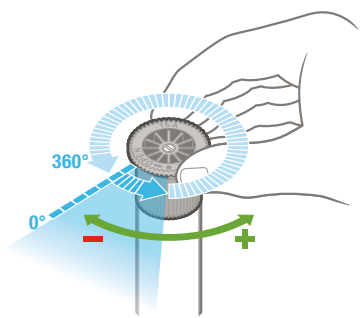
360°
0°
–
+

10A	1.0–3.0 Bar 100–300 kPa 20–40 PSI	0.7–9.5 l/m 0.2–2.3 GPM	2.6–3.5 m (9'–11')
12A	1.0–3.0 Bar 100–300 kPa 20–40 PSI	0.7–13.4 l/m 0.3–3.4 GPM	3.2 m–4.1 m (11'–13')
15A	1.0–3.0 Bar 100–300 kPa 20–40 PSI	1.3–18.0 l/m 0.4–4.5 GPM	4.0 m–5.2 m (14'–17')
17A	1.0–3.0 Bar 100–300 kPa 20–40 PSI	1.7–21.7 l/m 0.5–5.5 GPM	4.6 m–5.8 m (16'–19')