Franklin Electric Co., Inc.
P. O. Box 12010
Oklahoma City, OK 73157-2010
Phone: 405-947-2511 • Fax: 405-947-8720
www.LittleGiantPump.com
CustomerService-WTS@fele.com

14S-CIM
16S-CIM
14EH-CIM
16EH-CIM

EN ENGLISH

This instruction sheet provides you with the information required to safely own and operate your product. Retain these instructions for future reference.

The product you have purchased is of the highest quality workmanship and material, and has been engineered to give you long and reliable service. This product has been carefully tested, inspected, and packaged to ensure safe delivery and operation. Please examine your item(s) carefully to ensure that no damage occurred during shipment. If damage has occurred, please contact the place of purchase. They will assist you in replacement or repair, if required.

READ THESE INSTRUCTIONS CAREFULLY BEFORE ATTEMPTING TO INSTALL, OPERATE, OR SERVICE YOUR PRODUCT. KNOW THE PRODUCT'S APPLICATION, LIMITATIONS, AND POTENTIAL HAZARDS. PROTECT YOURSELF AND OTHERS BY OBSERVING ALL SAFETY INFORMATION. FAILURE TO COMPLY WITH THESE INSTRUCTIONS COULD RESULT IN PERSONAL INJURY AND/OR PROPERTY DAMAGE!

DESCRIPTION

Little Giant submersible 14S and 16S series sewage ejector pumps and 14EH/16EH series effluent pumps are recommended for use in basins or lift stations and are suitable for pumping sewage, effluent, wastewater, and other non-explosive, non-corrosive liquids.

Little Giant offers a complete line of float switches and liquid level control systems for automatic operation, along with a complete line of alarms, basins, covers, and check valves.

SAFETY GUIDELINES

⚠ WARNING ⚠

READ ALL INSTRUCTIONS AND SAFETY GUIDELINES THOROUGHLY. FAILURE TO FOLLOW THE GUIDELINES AND THE INSTRUCTIONS COULD RESULT IN SERIOUS BODILY INJURY AND/OR PROPERTY DAMAGE.

WARNING: RISK OF ELECTRIC SHOCK. This pump is supplied with a grounding conductor and/or grounding type attachment plug. To reduce the risk of electric shock, connect it only to a properly grounded, grounding-type receptacle.

If this pump is equipped with a 3-prong electrical plug, the third prong grounds the pump to prevent possible electrical shock hazard. Do not remove the third prong from the plug. A separate branch circuit is recommended. Do not use an extension cord.

When the pump is in a basin, sump, lift station, etc., do not touch the motor, pipes, or water until the pump is unplugged or shut off. If your installation has water or moisture present, do not touch the wet area until all power has been turned off. If the shut-off box is not accessible, call the electric company to shut off service to the

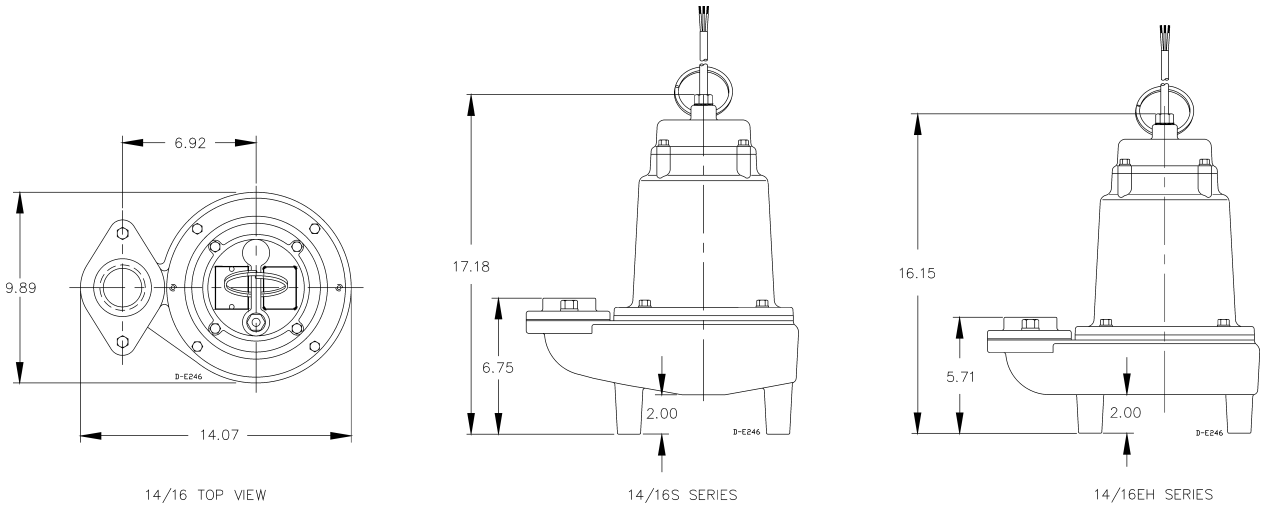

Figure 1 - Dimensions

MODEL	LISTING	HP	VOLTS	AMPS/ WATTS	GALLONS PER MINUTE @ FEET OF HEAD									POWER CORD (ft.)	WEIGHT (lbs.)
					5'	10'	20'	30'	40'	50'	60'	SHUT-OFF	P.S.I.		
14EH-CIM	UL	1/2	115	12.5/1450	NR	NR	60	40	20	--	--	50'	21.6	20	74
14EH-CIM	UL	1/2	208-240	5.7/1275	NR	NR	60	40	20	--	--	50'	21.6	20	74
14S-CIM	UL	1/2	115	11.6/1100	130	100	35	--	--	--	--	25'	10.8	20	80
14S-CIM	UL	1/2	208-240	4.6/1100	130	100	35	--	--	--	--	25'	10.8	20	80
16EH-CIM	UL	1	230	9.0/2200	NR	NR	NR	90	70	50	30	81'	35.1	20	82
16S-CIM	UL	1	230	11.0/1900	180	160	100	40	--	--	--	35'	15.1	20	88
16S-CIM	UL	1	200-208	11.0/2000	180	160	100	40	--	--	--	35'	15.1	20	88

NR: Not recommended. Operation at these heads or below will result in motor overload, reduced pump life, and/or motor failure/damage.

house, or call your local fire department for instructions. Failure to follow this warning can result in fatal electrical shock.

Do not modify the power cord except to shorten it to fit into a control panel. Any splice between the pump and the control panel must be made within a junction box and mounted outside of the basin, and comply with the National Electrical Code. Do not use the power cord for lifting the pump.

The pump motor is equipped with an automatic-resetting, thermal protector and may restart unexpectedly. Protector-tripping is an indication of motor overloading as a result of operating the pump at low heads (low discharge restriction), excessively high or low voltage, inadequate wiring, incorrect motor connections, or a defective motor or pump.

Do not use to pump flammable or explosive fluids such as gasoline, fuel oil, kerosene, etc. Failure to follow this warning can result in personal injury and/or property damage.

During normal operation the pump is immersed in water. Also, during rain storms, water may be present in the surrounding area of the pump. Use caution to prevent bodily injury when working near the pump:

Remove the plug from the receptacle before touching, servicing, or repairing the pump.

To minimize possible fatal electrical shock hazard, use extreme care when changing fuses. Do not stand in water while changing fuses or insert your fingers into the fuse socket.

Do not operate the pump in a dry basin. This will cause the pump to become extremely hot, causing burns if touched and/or damage to the pump.

Do not oil the motor. The pump housing is sealed. A high grade dielectric oil devoid of water has been put into the motor housing at the factory. Use of other oil could cause serious electric shock and/or permanent damage to the pump.

Do not install the pump in locations classified as hazardous in accordance with the National Electrical Code, ANSI/NFPA 70.

In any installation where property damage and/or personal injury might result from inoperative or leaking pump due to power outages, discharge line blockage, or any other reason, use a backup system(s) and/or alarm.

SPECIFICATIONS

DISCHARGE: 14EH and 16EH – 2”, 14S – 2” or 3”, 16S – 3”

HANDLING CAPABILITIES: EH Series – 3/4” spherical solids, S Series – 2” spherical solids

HOUSING: Cast iron

VOLUTE: Cast iron

IMPELLER: Non-clog, cast iron with pressure relief vanes

MOTOR: PSC, 3450 RPM (EH Series), 1625 RPM (S Series), with automatic overload protection

HARDWARE: 300-series stainless steel

BEARING: Ball

SHAFT SEAL: Mechanical, spring-loaded, rotating carbon with Nitrile boot and stationary ceramic seat, with secondary Nitrile exclusion seal

POWER CORD: 16 AWG, 3-conductor, copper stranded; 18 AWG (208-240V models)

COOLING: The motor housing contains oil to cool the motor and to lubricate the bearings and seals. For the best cooling and longest motor life, however, the level of the liquid being pumped should be above the top of the motor housing.

INSTALLATION

⚠ WARNING ⚠

For automatic operation, plug or wire the pump into a float switch or liquid level controller. Installation instructions are included with all Little Giant switches and controllers and should be referred to for installation.

The pump will run continuously when plugged directly into an electrical outlet. Take care to prevent the pump from running in a dry sump.

Install the pump in a suitable, gas-tight basin that is at least 18” in diameter and 30” deep, and vented in accordance with local plumbing codes.

Place the pump on a hard, level surface. Never place the pump directly onto clay, earth, or gravel surfaces.

The pump can be installed with ABS, PVC, polyethylene, or galvanized steel pipe. Proper adapters are required to connect plastic pipe to the pump.

To facilitate pump removal (if necessary), install a union just above the cover.

Use a check valve in the discharge line to prevent backflow of liquid into the basin. This should be a free-flow valve that will easily pass solids.

CAUTION: For best performance of check valves, when handling solids install the valve horizontally or at an angle of no more than 45°. Do not install the valve vertically, as solids may settle in the valve and prevent opening on start-up.

A gate valve should follow the check valve to allow periodic cleaning of the check valve or removal of the pump.

The remainder of the discharge line should be as short as possible with a minimum of turns to minimize friction head loss. Do not restrict the discharge to sizes below 2”.

Sewage and effluent applications require a separate sump vent. A connection is provided on top of the sump or cover. This connection must be piped to the existing building vent or extended outside with its own standpipe.

WIRING

⚠ WARNING ⚠

Check local electrical and building codes before installation. The installation must be in accordance with their regulations as well as the most recent National Electrical Code (NEC).

To conform to the National Electrical Code, all pumps must be wired with 14 AWG or larger wire. For runs to 250 feet, 14 AWG wire is sufficient. For longer runs, consult a qualified electrician or the factory.

Connect or wire the pump to its own circuit, with no other outlets or equipment in the circuit line. Fuses and circuit breaker should be of ample capacity in the electrical circuit. See Table 1.

H.P.	VOLTAGE	FUSE OR CIRCUIT BREAKER AMPS
½, 1	115	20
½, 1	230	15

TABLE 1

MAINTENANCE AND SERVICING

⚠ WARNING ⚠

WARNING: Before working on the pump or switch, unplug the pump power cord, in addition to removing the fuse or shutting off the circuit breaker.

If the pump does not operate properly, consult the Troubleshooting table. If the trouble still cannot be found, consult your pump dealer or take the pump to a Little Giant authorized service center.

CAUTION: DO NOT remove the socket head cap screws (item #3, Figure 3). The motor section of your pump is permanently lubricated with dielectric oil and is sealed at the factory. Removal of these screws by anyone other than an authorized Little Giant service center will break the seal and void the warranty.

1. Remove the 4 screws (item #18, Figure 3) that hold the volute to the motor housing, then separate the volute from the housing
2. Clean the impeller and volute passage.
3. Be sure impeller turns freely.
4. Attach the volute to the housing and secure it with the 4 screws.

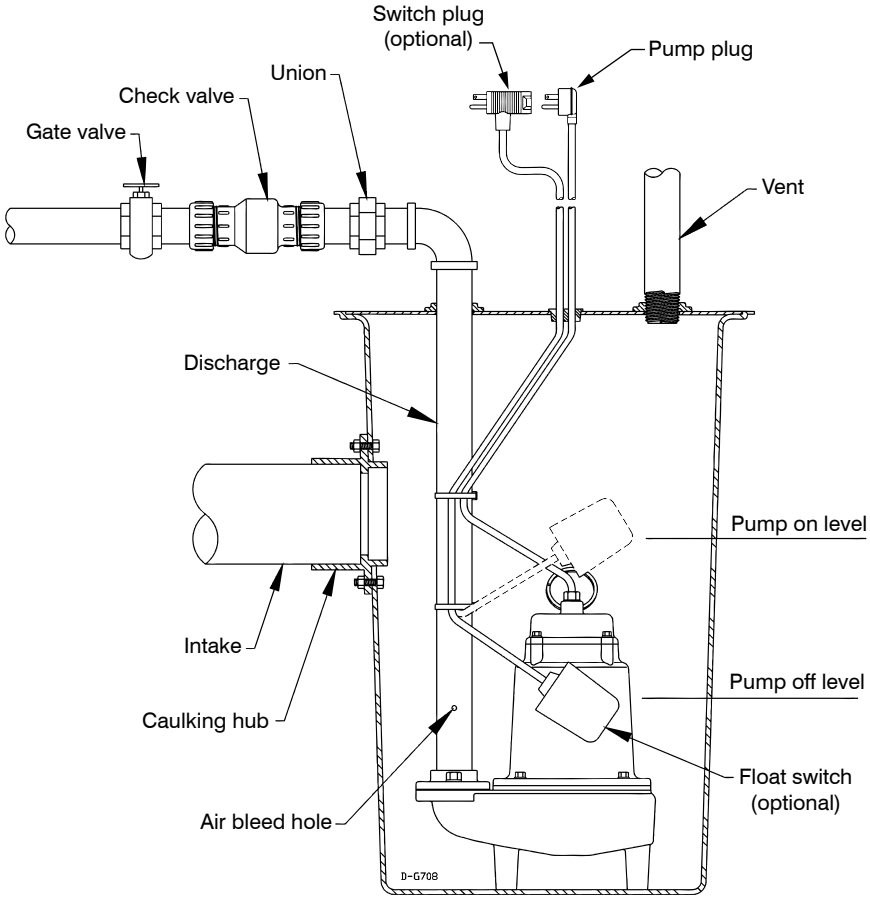

FIGURE 2 - TYPICAL INSTALLATION

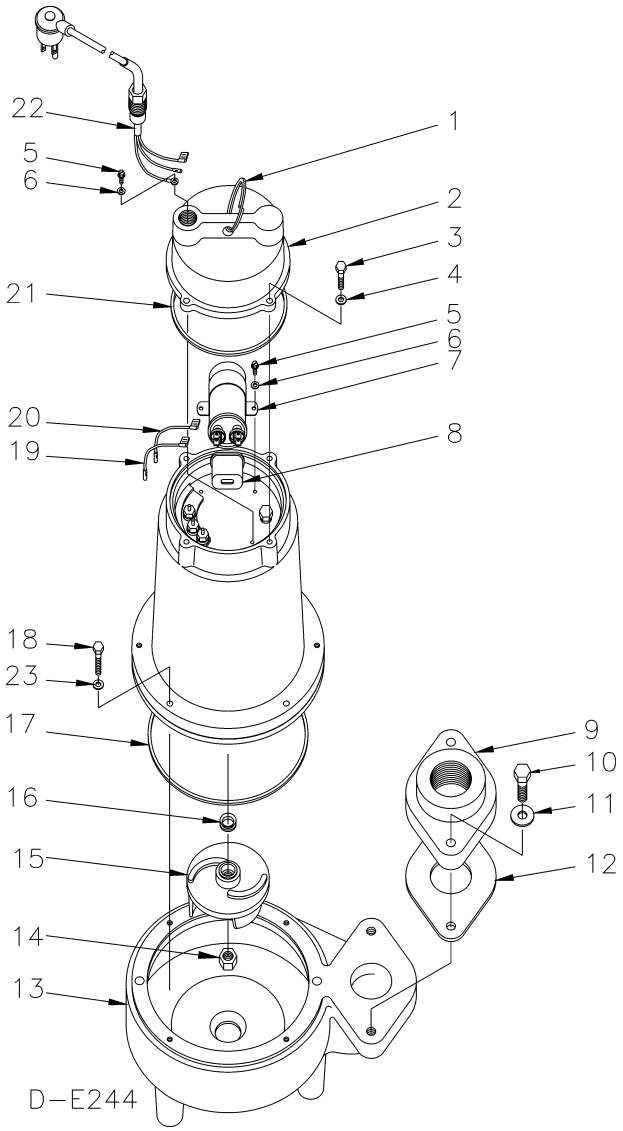

Figure 3

ITEM NO.	PART NO.	DESCRIPTION	MODEL/CATALOG NO.								
			14EH-CIM 514220	14EH-CIM 514221	14S-CIM 514320	14S-CIM 514321	14S-CIM 514420	16EH-CIM 514520	16S-CIM 514620	16S-CIM 514625	16S-CIM 514630
1	114100	WIRE HANDLE	1	1	1	1	1	1	1	1	1
2	114051	COVER, HOUSING	1	1	1	1	1	1	1	1	1
3	903723	SCREW, 1/4-20 x 3/4”	4	4	4	4	4	4	4	4	4
4	921103	LOCK WASHER, 1/4”	4	4	4	4	4	4	4	4	4
5	902437	SCREW, #8-32 x 1/4”	3	3	3	3	3	3	3	3	3
6	921059	LOCK WASHER, #8	3	3	3	3	3	3	3	3	3
7	950500/ 950503	CAPACITOR, 20mfd, 1.75” DIA/CLIP, 1.75” DIA.	--	--	1	1	1	--	1	1	1
7	950501/ 950503 or 950504/ 950505	CAPACITOR, 30mfd, 1.75” DIA/CLIP, 1.75” DIA. ——— CAPACITOR, 30mfd, 2.00” DIA/CLIP, 2.00” DIA.	1	1	--	--	--	1	--	--	--
8	950502	BOOT, INSULATING	1	1	1	1	1	1	1	1	1
9	114004	DISCH. FLANGE, 2” FNPT	1	1	1	1	--	1	--	--	--
9	114009	DISCH. FLANGE, 3” FNPT	--	--	--	--	1	--	1	1	1
10	903722	SCREW, 7/16-14 x 1-1/4”	2	2	2	2	2	2	2	2	2
11	921104	LOCK WASHER, 7/16”	2	2	2	2	2	2	2	2	2
12	114101	FLANGE GASKET	1	1	1	1	1	1	1	1	1
13	114038	VOLUTE, 14EH/16EH	1	1	--	--	--	1	--	--	--
13	114043	VOLUTE, 14S/16S			1	1	1		1	1	1
14	920004	JAM NUT, 1/2” x 20	1	1	1	1	1	1	1	1	1
15	114054	IMPELLER, 14EH	1	1	--	--	--	--	--	--	--
15	114044	IMPELLER, 14S	--	--	1	1	1	--	--	--	--
15	114056	IMPELLER, 16EH	--	--	--	--	--	1	--	--	--
15	114052	IMPELLER, 16S	--	--	--	--	--	--	1	1	1
16	926016	V-SEAL, NITRILE	1	1	1	1	1	1	1	1	1
17	928033	SEAL RING, 7.484” I.D.	1	1	1	1	1	1	1	1	1
18	903724	SCREW, 5/16-18 x 1-1/4”	4	4	4	4	4	4	4	4	4
19	951972	LEAD WIRE ASSY., RED	1	1	1	1	1	1	1	1	1
20	951971	LEAD WIRE ASSY., BLACK	1	1	1	1	1	1	1	1	1
21	928034	SEAL RING, 5.359” I.D.	1	1	1	1	1	1	1	1	1
22	951843	WIRING HARNESS, 115V W/PLUG	1	--	1	--	1	--	--	--	--
22	951844	WIRING HARNESS, STRIPPED	--	--	--	--	--	1	1	1	--
22	951842	WIRING HARNESS, 208-240V W/PLUG	--	1	--	1	--	--	--	--	--
22	951840	WIRING HARNESS, 230V, 40’, 16/3	--	--	--	--	--	--	--	--	1
23	921105	LOCK WASHER, 5/16”	4	4	4	4	4	4	4	4	4

Table 2 - Replacement Parts

TROUBLESHOOTING		
PROBLEM	**PROBABLE CAUSES**	**CORRECTIVE ACTION**
Pump does not turn on. **NOTE:** Before troubleshooting automatic control, check to see that pump operates on manual control. To do this, unplug from in-line float switch plug. Plug pump power cord into wall outlet. If pump works, proceed to check switch; if not, fault is in pump or power supply.	Pump not plugged in.	Plug in pump.
	Circuit breaker shutoff or fuse removed.	Turn on circuit breaker or replace fuse.
	Accumulation of trash on mercury float switch.	Clean float.
	Mercury float switch obscruction.	Check float path and provide clearance.
	Defective switch.	Disconnect switch, check with ohmmeter: Open=infinite resistance, closed=zero.
	Defective motor.	Have pump serviced.
Pump will not shut off.	Mercury switch float obstruction.	Check float path and provide clearance.
	Pump is air locked.	Shut power off for approximately 1 minute, then restart. Repeat several times to clear air from pump. If system includes a check valve, a 3/16” hole should be drilled in discharge pipe approximately 2” above discharge connections.
	Liquid inflow matches pump capacity.	Larger pump required.
	Defective switch.	Disconnect switch, check with ohmmeter: Open=infinite resistance, closed=zero.
	Loose connection in level control wiring.	Check control wiring.
Pump runs but does not discharge liquid.	Check valve installed backwards.	Check flow indicating arrow on check valve body to insure it is installed properly.
	Check valve stuck or plugged.	Remove check valve and inspect for proper operation.
	Lift too high for pump.	Check rating table.
	Inlet to impeller plugged.	Pull pump and clean.
	Pump is air locked.	(See corrective action above.)
Pump does not deliver rated capacity.	Lift too high for pump.	Check rated pump performance.
	Low voltage, speed too slow.	Check for proper supply voltage to make certain it corresponds to nameplate voltage.
	Impeller or discharge pipe is clogged.	Pull pump and clean. Check pipe for scale or corrosion.
	Impeller wear due to abrasives.	Replace worn impeller.
Pump cycles continually.	No check valve in long discharge pipe, allowing liquid to drain back into basin.	Install a check valve in discharge line.
	Check valve leaking.	Inspect check valve for correct operation.
	Basin too small for inflow.	Install larger basin.

LIMITED WARRANTY
SUMP, EFFLUENT & RESIDENTIAL SEWAGE

INTRODUCTION

Little Giant #8E, #9E, #1OE, #14EH, and #16EH Series Submersible Effluent Pumps are recommended for use in sumps, basins or lift stations and suitable for pumping basement drainage water, effluent, wastewater and other non-explosive, non-corrosive, non-abrasive liquids not above 140°F with up to 3/4" spherical solids handling ability (NOT TO BE USED FOR SEWAGE WATER EXCEPT TO PUMP SEPTIC TANK EFFLUENT)

Little Giant #9S, #10S, #14S and #16S Series Submersible Sewage Ejector Pumps are recommended for use in sumps, basins or lift stations and suitable for pumping sewage, effluent, wastewater and other non-explosive, non-corrosive, non-abrasive liquids not above 140°F with up to 2" spherical solids handling ability.

Each of the above noted Little Giant products is guaranteed to be in perfect condition when it leaves our factory. During the time periods and subject to the conditions hereinafter set forth, LITTLE GIANT PUMP COMPANY, subsidiary of Franklin Electric Company, Inc., will repair or replace to the original user or consumer any portion of your new LITTLE GIANT product which proves defective due to materials or workmanship of LITTLE GIANT. Contact your nearest Authorized Little Giant Dealer for warranty service. At all times LITTLE GIANT shall have and possess the sole right and option to determine whether to repair or replace defective equipment, parts, or components. Damage due to lightning or conditions beyond the control of LITTLE GIANT is NOT COVERED BY THIS WARRANTY.

WARRANTY PERIOD

PUMPS: 24 months from date of purchase or 30 months from date of manufacture, whichever occurs first.

LABOR, ETC. COSTS: LITTLE GIANT shall IN NO EVENT be responsible or liable for the cost of field labor or other charges incurred by any customer in removing and/or affixing any LITTLE GIANT product, part or component thereof.

THIS WARRANTY WILL NOT APPLY:

1. to defects or malfunctions resulting from failure to properly install, operate, or maintain the unit in accordance with printed instructions provided
2. to failures resulting from abuse, accident or negligence
3. to normal maintenance services and the parts used in connection with such service
4. to units which are not installed in accordance with applicable local codes, ordinances and good trade practices
5. unit is used for purposes other than for what it was designed and manufactured
6. if pump exposed to but not limited to the following: sand, gravel, cement, grease, plaster, mud, tar, hydrocarbons, or hydrocarbon derivatives (oil, gasoline, solvents, etc.) or other abrasive or corrosive substances.
7. if pump has been used for continuous pumping of suitable liquids above 140°F
8. if power cord has been cut or spliced
9. if pump has been dismantled by customer (Dealer only can dismantle pump for field service.)

RETURN OR REPLACED COMPONENTS: Any item to be replaced under the Warranty must be returned to LITTLE GIANT at Oklahoma City, OK or such other place as LITTLE GIANT may designate, freight prepaid.

PRODUCT IMPROVEMENTS: LITTLE GIANT reserves the right to change or improve its products or any portions thereof without being obligated to provide such a change or improvement for units sold and/or shipped prior to such change or improvement.

DISCLAIMER: Any oral statements about the product made by the seller, the manufacturer, the representatives or any other parties do not constitute warranties, shall not be relied upon by the user, and are not part of the contract for sale. Seller's and manufacturer's only obligation, and buyer's only remedy, shall be the replacement and/or repair by the manufacturer of the product as described above. Neither seller nor the manufacturer shall be liable for any injury, loss or damage, direct, incidental or consequential (including, but not limited to, incidental or consequential damages for lost profits, lost sales, injury to person or property, or any other incidental or consequential loss), arising out of the use or the inability to use the product, and the user agrees that no other remedy shall be available to it. Before using, the user shall determine the suitability of the product for his intended use, and user assumes all risk and liability whatsoever in connection therewith. **The warranty and remedy described** in this limited warranty **is an EXCLUSIVE warranty** and remedy and is **IN LIEU OF** any other warranty or remedy, expressed or implied, which other warranties and remedies are hereby expressly **EXCLUDED**, including but not limited to any implied warranty of **MERCHANTABILITY OR FITNESS FOR A PARTICULAR PURPOSE.** Some states do not allow the exclusive or Imitation of incidental or consequential damages, so the above limitation or exclusion may not apply to you. This warranty gives you specific legal rights, and you may also have other rights which vary from state to state.

In the absence of other suitable proof of the purchase date, the effective date of this warranty will be based upon the date of manufacture plus 24 months. Direct all notices, etc., to: Service Department, LITTLE GIANT PUMP COMPANY, 301 North MacArthur Blvd., Oklahoma City, OK 73127-6616.

DETERMINATION OF UNIT DATE OF MANUFACTURE: (9-87) month and year stamped on pump and/or serial number on pump nameplate coded to indicate year of manufacture.

For parts or repair, please contact 1-888-572-9933
For technical assistance, please contact 1-888-956-0000

www.LittleGiantPump.com
CustomerService-WTS@fele.com

Form 993302 - 5/24/2010
© 2009 - 2010 Franklin Electric Co., Inc.
Little Giant® is a registered trademark of Franklin Electric Co., Inc.