Uncontrolled Copy

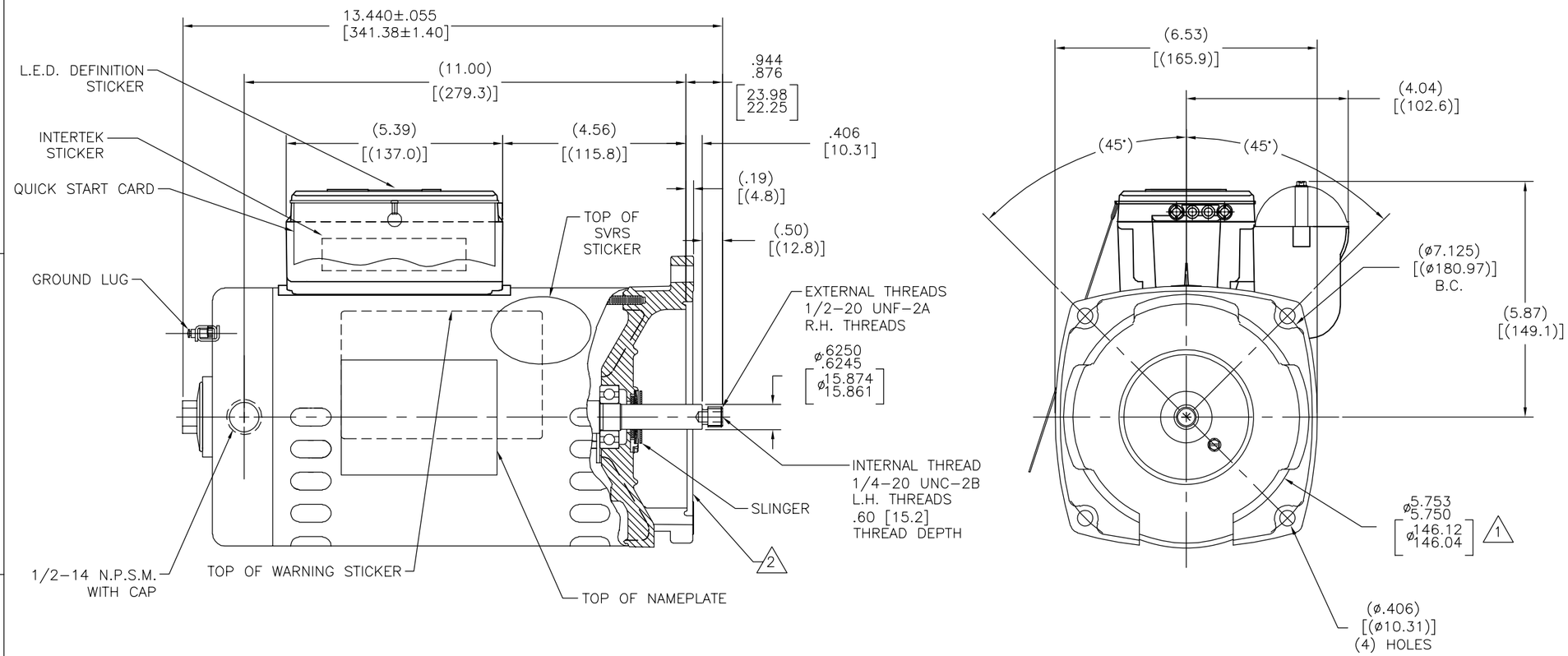


## NAMEPLATE DATA

MODEL: F56AA43A01
CUST PN: BG748A
HP: 2.0 SF: 1.30
ROT: CCWPE
RPM: 3450
TYPE: CX CODE: G
FORM: KJM FRAME: Y56Y
VOLTS: 230
AMPS:
MAX AMPS:
SF AMPS: 11.5
PH: 1 HZ: 60
INS: B AMB: 50°C
DUTY: CONT
ENCLOSURE: ODP
THERMALLY PROTECTED

## EXTERNAL CONNECTION DIAGRAM

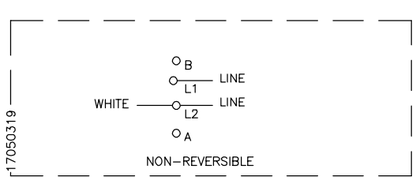


## NOTES

1. PILOT DIAMETER IS CONCENTRIC WITH SHAFT CENTERLINE WITHIN .006 T.I.R.
2. FACE OF MOUNTING FLANGE IS PERPENDICULAR TO SHAFT CENTERLINE WITHIN .004 T.I.R.
3. SHAFT RUNOUT NOT TO EXCEED .002 T.I.R
4. FOR THREADED SHAFT EXT. MATING PARTS SHOULD BE RELIEVED ONE THREAD TO CLEAR FILLET
5. FOR THREADED SHAFT EXT. ECCENTRICITY OF THREADED PORTION OF SHAFT IS HELD WITHIN .004 TOTAL GAGE READING WITH THE INDICATOR ON O.D. OF GROUND RING GAGE AS SHOWN. THE GAGE BEING STATIONARY WITH RESPECT TO THE ROTOR.
6. END PLAY NOT TO EXCEED .010 MEASURED WITH NO THRUST
7. ALL DIMENSIONS SHOWN IN PARENTHESIS ARE REFERENCE DIMENSIONS.
8. FINISH PAINT TO BE SATIN BLACK

| PERFORMANCE CURVE | | APPROVED SAMPLE | |
|---|---|---|---|
| 15593311 | | | |
| UL COMPONENT | | CSA | |
| FILE# | CCN# | FILE# | GUIDE# |
| PENDING | PENDING | PENDING | PENDING |
| CUSTOMER | DISTRIBUTION SERVICES | | |

| DRAWING REVISION | REVISION BY | DATE |
|---|---|---|
| D | J.AGUILERA | 02–11–2015 |
| ECO | APPROVED BY | DATE |
| 0068888 | D.VALENCIANO | 02–11–2015 |
| ECO DESCRIPTION | | |
| SEE ECO | | |

COPYRIGHT REGAL BELOIT AMERICA, INC. ALL RIGHTS RESERVED.
PROPRIETARY AND CONFIDENTIAL INFORMATION – THIS DOCUMENT IS THE PROPERTY OF REGAL BELOIT AMERICA, INC. ("OWNER") AND CONTAINS OWNER'S PROPRIETARY INFORMATION. ANY PERSON, CORPORATION OR OTHER FIRM RECEIVING IT IS DEEMED, BY RECEIVING IT, TO AGREE THAT IT, AND/OR ANY PART OF IT, SHALL NOT BE DISCLOSED TO ANY PERSON, CORPORATION OR OTHER ENTITY, DUPLICATED, AND/OR USED, EXCEPT AS EXPRESSLY APPROVED IN WRITING IN ADVANCE BY OWNER. THIS DOCUMENT SHALL BE RETURNED TO OWNER UPON REQUEST. IT MAY BE SUBJECT TO CERTAIN RESTRICTIONS UNDER APPLICABLE EXPORT CONTROL LAWS AND REGULATIONS.

TOLERANCES UNLESS OTHERWISE SPECIFIED

| DEC. | INCH | mm | ANGLE |
|---|---|---|---|
| .X | ±0.1 | [±2.5] | ±0.5° |
| .XX | ±0.02 | [±0.51] | |
| .XXX | ±0.005 | [±0.127] | |
| .XXXX | ±0.0005 | [±0.0127] | |

REMOVE BURRS & BREAK SHARP EDGES .003/.015 [.076/.381]
CORNER FILLETS .02 [.51]
MACHINED SURFACES 125/ INCH 3.2/ mm
mm SHOWN IN [BRACKETS]

| | |
|---|---|
| DRAWN BY: | JHENRY |
| DATE: | 06–11–2009 |
| APPROVED BY: | . |
| DATE: | . |
| REFERENCE | . |
| THIRD ANGLE PROJECTION | |

Regal Beloit America, Inc.

DESCRIPTION: MODEL–PFHP–56FR OUTLINE

MATERIAL: . PROCESS/FINISH: .

SIZE: C DWG NO: BG748A SHEET: 1