Uncontrolled Copy

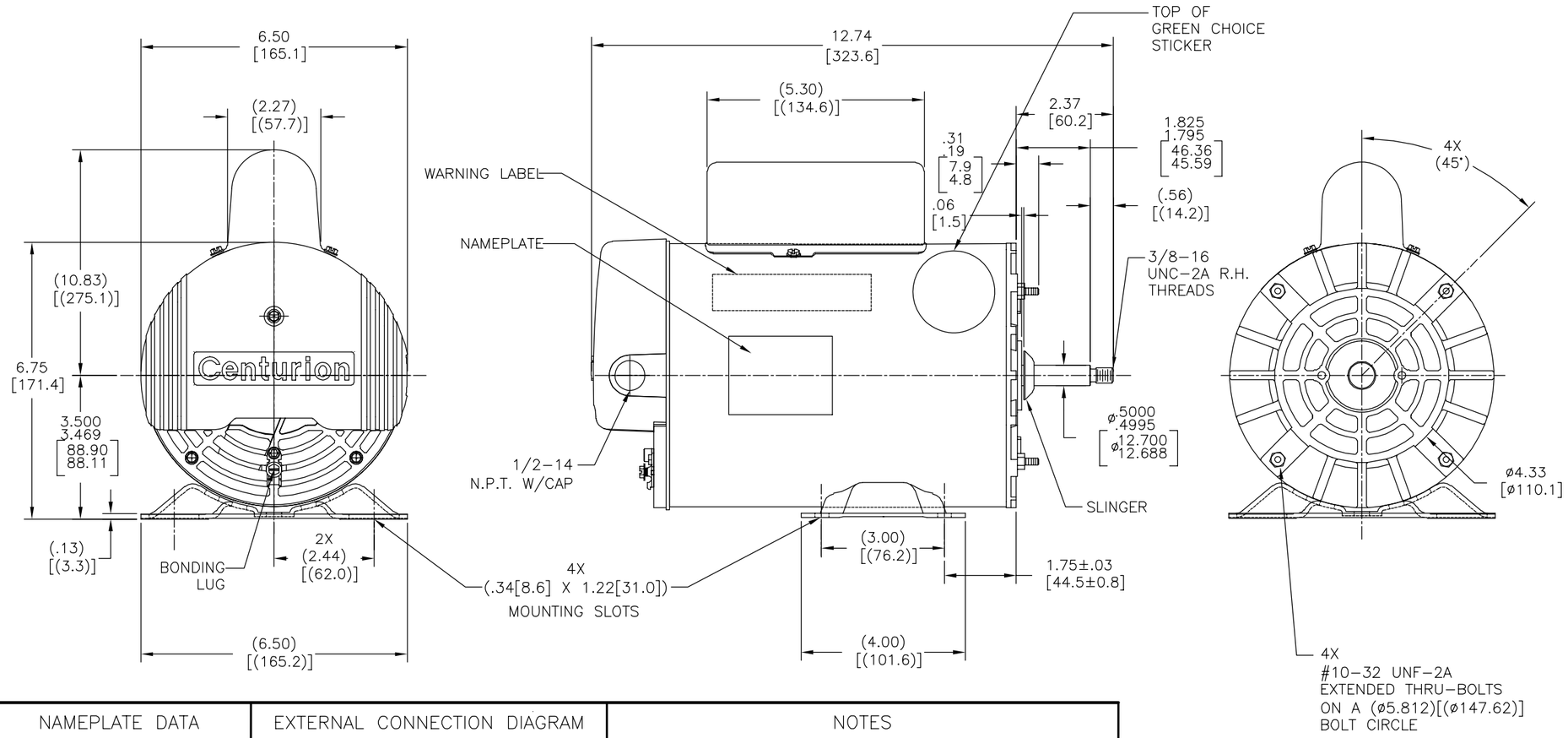

NAMEPLATE DATA	EXTERNAL CONNECTION DIAGRAM	NOTES
MODEL: F56AA55A01 CUST PN: B2234 HP: _ _ _ SF: _ _ _ ROT: CCWPE RPM: 3450/1725 TYPE: CXCP CODE: J FORM: KJM FRAME: P56Y VOLTS: 230 AMPS: MAX AMPS: 10.0/1.8 SF AMPS: PH: 1 HZ: 60 INS: F AMB: 50 DUTY: CONT ENCLOSURE: ODP THERMALLY PROTECTED	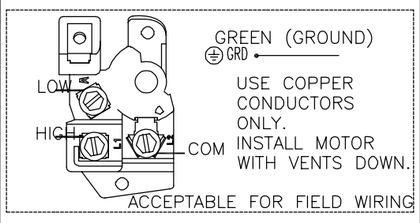	1. SHAFT RUNOUT NOT TO EXCEED .002[.05] T.I.R 2. ALL DIMENSIONS SHOWN IN PARENTHESIS ARE REFERENCE DIMENSIONS. 3. REF 2.0/.250HP 8.8/1.6A 2.2/.275HP 9.7/1.6A MAXLOAD AMPS 10.0/1.8A

PERFORMANCE CURVE		APPROVED SAMPLE	
0116754		CSR–0000478	
UL COMPONENT		CSA	
FILE#	CCN#	FILE#	GUIDE#
E25022	XEWR2	LR43341	4211–01
CUSTOMER	DISTRIBUTION		

DRAWING REVISION	REVISION BY	DATE
G	A.GONZALEZ	03–10–2014
ECO	APPROVED BY	DATE
ECP–0046781	G.ALVIDREZ	03–10–2014
ECO DESCRIPTION		
SEE ECO		

COPYRIGHT REGAL BELOIT AMERICA, INC. ALL RIGHTS RESERVED.
PROPRIETARY AND CONFIDENTIAL INFORMATION – THIS DOCUMENT IS THE PROPERTY OF REGAL BELOIT AMERICA, INC. ("OWNER") AND CONTAINS OWNER'S PROPRIETARY INFORMATION. ANY PERSON, CORPORATION OR OTHER FIRM RECEIVING IT IS DEEMED, BY RECEIVING IT, TO AGREE THAT IT, AND/OR ANY PART OF IT, SHALL NOT BE DISCLOSED TO ANY PERSON, CORPORATION OR OTHER ENTITY, DUPLICATED, AND/OR USED, EXCEPT AS EXPRESSLY APPROVED IN WRITING IN ADVANCE BY OWNER. THIS DOCUMENT SHALL BE RETURNED TO OWNER UPON REQUEST. IT MAY BE SUBJECT TO CERTAIN RESTRICTIONS UNDER APPLICABLE EXPORT CONTROL LAWS AND REGULATIONS.

TOLERANCES UNLESS OTHERWISE SPECIFIED

DEC.	mm	INCH	ANGLE
.X	±2.5	[±0.10]	±0.5°
.XX	±0.50	[±0.020]	
.XXX	±0.130	[±0.0051]	
.XXXX	±0.0130	[±0.00051]	

REMOVE BURRS & BREAK SHARP EDGES .08/.38 [.003/.015]
CORNER FILLETS .50 [.020]
MACHINED SURFACES 125/3.2 INCH/mm
INCH SHOWN IN [BRACKETS]

DRAWN BY: BL
DATE: 05–18–2010
APPROVED BY: ML
DATE: 05–18–2010
PROCESS/FINISH
THIRD ANGLE PROJECTION

Regal Beloit America, Inc.

DESCRIPTION
MODEL–PFHP–56FR
OUTLINE

MATERIAL

SIZE	DWG NO	SHEET
C	B2234	1