Uncontrolled Copy

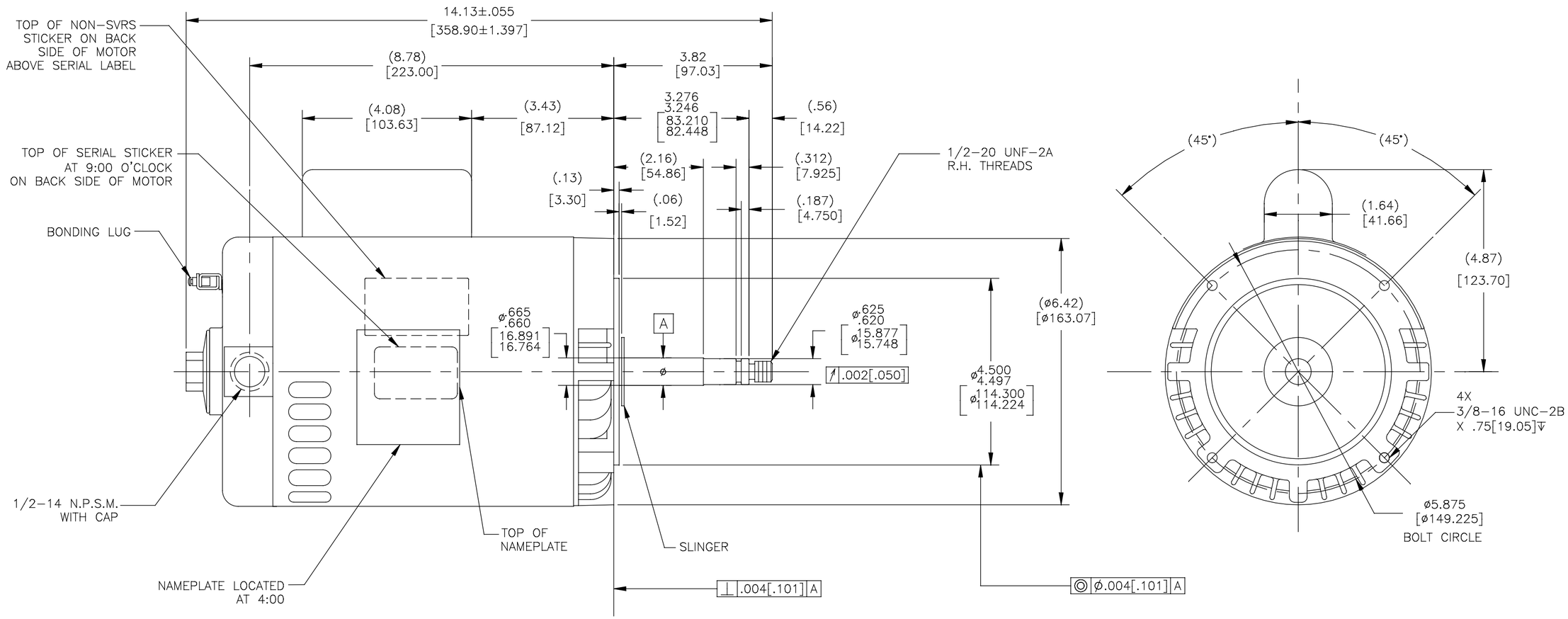

NAMEPLATE DATA

MODEL: 173840
CUST PN: B625
HP: 3/4 SF: 1.50
ROT: CCWPE
RPM: 3450
TYPE: CS CODE: K
FORM: FRAME: N 56 CZ
VOLTS: 230/115
AMPS: 6.4/12.8
MAX AMPS:
SF AMPS:
PH: 1 HZ: 60
INS: B AMB: 40°C
DUTY: CONT
ENCLOSURE: ODP
THERMALLY PROTECTED

EXTERNAL CONNECTION DIAGRAM

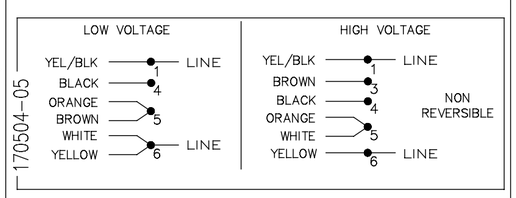

NOTES

1. FOR THREADED SHAFT EXTENSION MATING PARTS SHOULD BE RELIEVED ONE THREAD TO CLEAR FILLET.
2. END PLAY NOT TO EXCEED .010[.25] MEASURED WITH NO THRUST.
3. ALL DIMENSIONS SHOWN IN PARENTHESIS ARE REFERENCE DIMENSIONS.

PERFORMANCE CURVE		APPROVED SAMPLE	
17142711		0701613	
UL COMPONENT		CSA	
FILE#	CCN#	FILE#	GUIDE#
-----	-----	-----	-----
CUSTOMER	DISTRIBUTION		

DRAWING REVISION	REVISION BY	DATE
H	P.ROJAS	07-09-2015
ECO	APPROVED BY	DATE
ECO-0080943	T.REYES	07-09-2015
ECO DESCRIPTION		
SEE ECO		

COPYRIGHT REGAL BELOIT AMERICA, INC. ALL RIGHTS RESERVED. PROPRIETARY AND CONFIDENTIAL INFORMATION – THIS DOCUMENT IS THE PROPERTY OF REGAL BELOIT AMERICA, INC. ("OWNER") AND CONTAINS OWNER'S PROPRIETARY INFORMATION. ANY PERSON, CORPORATION OR OTHER FIRM RECEIVING IT IS DEEMED, BY RECEIVING IT, TO AGREE THAT IT, AND/OR ANY PART OF IT, SHALL NOT BE DISCLOSED TO ANY PERSON, CORPORATION OR OTHER ENTITY, DUPLICATED, AND/OR USED, EXCEPT AS EXPRESSLY APPROVED IN WRITING IN ADVANCE BY OWNER. THIS DOCUMENT SHALL BE RETURNED TO OWNER UPON REQUEST. IT MAY BE SUBJECT TO CERTAIN RESTRICTIONS UNDER APPLICABLE EXPORT CONTROL LAWS AND REGULATIONS.

TOLERANCES UNLESS OTHERWISE SPECIFIED

DEC.	INCH	mm	ANGLE
.X	±0.1	[±2.5]	±0.5°
.XX	±0.02	[±0.51]	
.XXX	±0.005	[±0.127]	
.XXXX	±0.0005	[±0.0127]	

REMOVE BURRS & BREAK SHARP EDGES .003/.015 [.076/.381]
CORNER FILLETS .02 [.51]
MACHINED SURFACES 125/ INCH 3.2/ mm
mm SHOWN IN [BRACKETS]

DRAWN BY: .
DATE: .
APPROVED BY: .
DATE: .
REFERENCE .
THIRD ANGLE PROJECTION

Regal Beloit America, Inc.

DESCRIPTION
MODEL- PFHP-56FR
OUTLINE

MATERIAL . PROCESS/FINISH .

SIZE C DWG NO B625 SHEET 1