Uncontrolled Copy

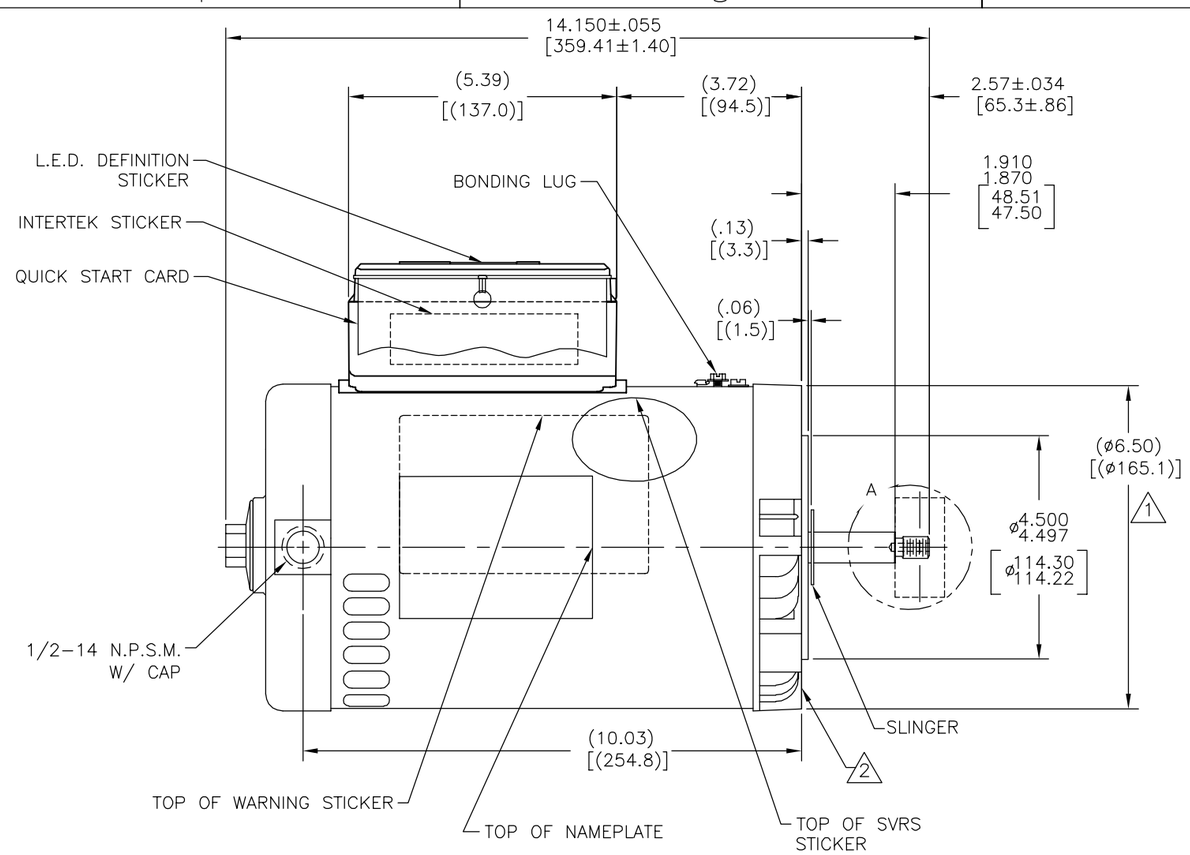

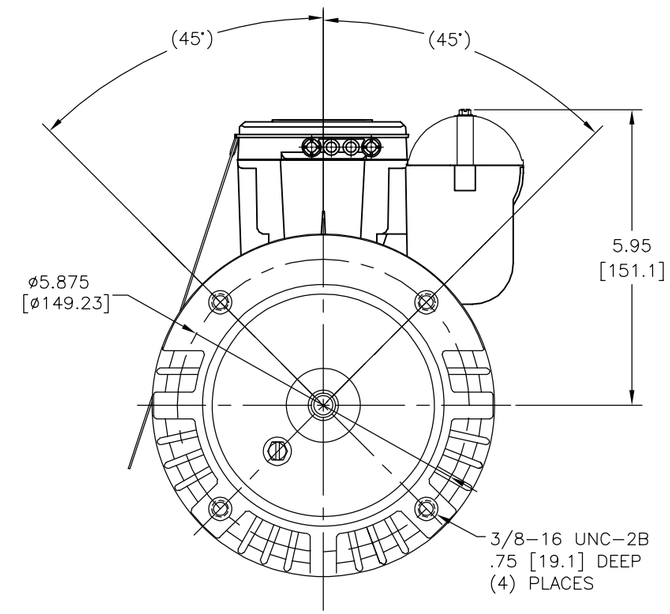

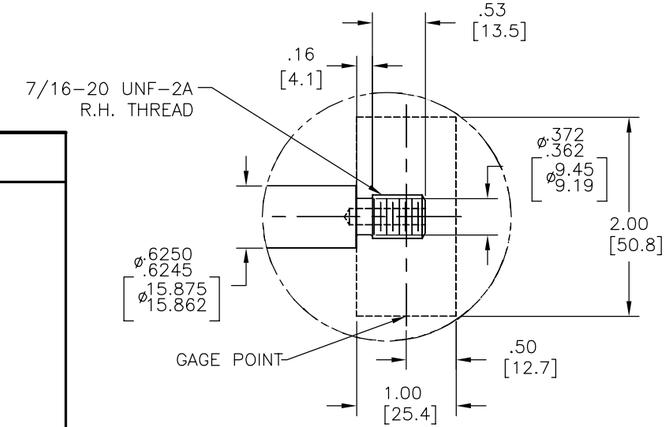

DETAIL A
SCALE 1:1

NAMEPLATE DATA

MODEL: F56AA39A01
CUST PN: BG131A
HP: 3.0 SF: 1.15
ROT: CCWPE
RPM: 3450
TYPE: CX CODE: F
FORM: KJM FRAME: Y56J
VOLTS: 230
AMPS:
MAX AMPS:
SF AMPS: 14.1
PH: 1 HZ: 60
INS: B AMB: 50°C
DUTY: CONT
ENCLOSURE: ODP
THERMALLY PROTECTED

EXTERNAL CONNECTION DIAGRAM

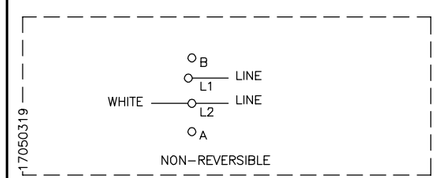

NOTES

1. PILOT DIAMETER IS CONCENTRIC WITH SHAFT CENTERLINE WITHIN .004 T.I.R.
2. FACE OF MOUNTING FLANGE IS PERPENDICULAR TO SHAFT CENTERLINE WITHIN .004 T.I.R.
3. SHAFT RUNOUT NOT TO EXCEED .002 T.I.R
4. END PLAY NOT TO EXCEED .010 MEASURED WITH NO THRUST
5. FINISH PAINT TO BE SATIN BLACK

PERFORMANCE CURVE		APPROVED SAMPLE	
15593411			
UL COMPONENT		CSA	
FILE#	CCN#	FILE#	GUIDE#
PENDING	PENDING	PENDING	PENDING
CUSTOMER	DISTRIBUTION SERVICES		

DRAWING REVISION	REVISION BY	DATE
D	MEO	08/20/14
ECO	APPROVED BY	DATE
ECO–58188	NATE SNELL	08/20/14

ECO DESCRIPTION
UPDATE TITLE BLOCK

COPYRIGHT REGAL BELOIT AMERICA, INC. ALL RIGHTS RESERVED.
PROPRIETARY AND CONFIDENTIAL INFORMATION – THIS DOCUMENT IS THE PROPERTY OF REGAL BELOIT AMERICA, INC. ("OWNER") AND CONTAINS OWNER'S PROPRIETARY INFORMATION. ANY PERSON, CORPORATION OR OTHER FIRM RECEIVING IT IS DEEMED, BY RECEIVING IT, TO AGREE THAT IT, AND/OR ANY PART OF IT, SHALL NOT BE DISCLOSED TO ANY PERSON, CORPORATION OR OTHER ENTITY, DUPLICATED, AND/OR USED, EXCEPT AS EXPRESSLY APPROVED IN WRITING IN ADVANCE BY OWNER. THIS DOCUMENT SHALL BE RETURNED TO OWNER UPON REQUEST. IT MAY BE SUBJECT TO CERTAIN RESTRICTIONS UNDER APPLICABLE EXPORT CONTROL LAWS AND REGULATIONS.

TOLERANCES UNLESS OTHERWISE SPECIFIED

DEC.	INCH	mm	ANGLE
.X	±0.1	[±2.5]	±0.5°
.XX	±0.02	[±0.51]	
.XXX	±0.005	[±0.127]	
.XXXX	±0.0005	[±0.0127]	

REMOVE BURRS & BREAK SHARP EDGES .003/.015 [.076/.381]
CORNER FILLETS .02 [.51]
MACHINED SURFACES INCH 125 mm 3.2
mm SHOWN IN [BRACKETS]

DRAWN BY: J.HENRY
DATE: 06–08–2009
APPROVED BY: .
DATE: .
REFERENCE .
THIRD ANGLE PROJECTION

Regal Beloit America, Inc.

DESCRIPTION
MODEL–PFHP–56FR
OUTLINE

MATERIAL ---- PROCESS/FINISH ----

SIZE C DWG NO BG131A SHEET 1