Uncontrolled Copy

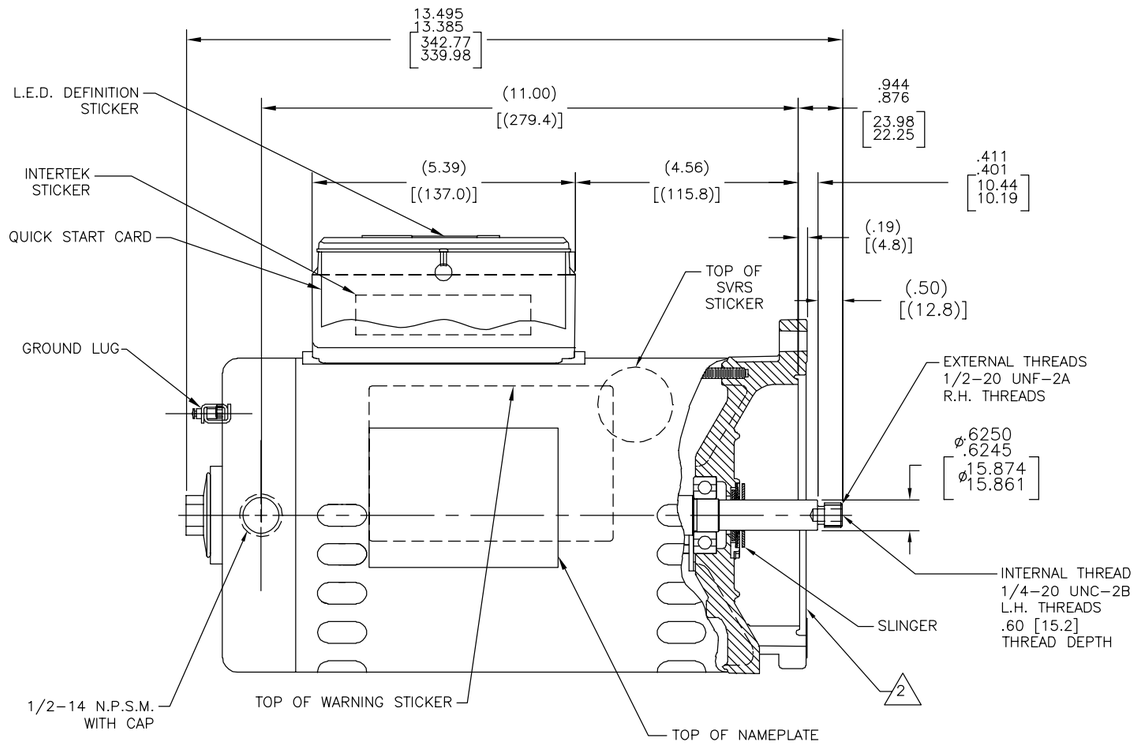

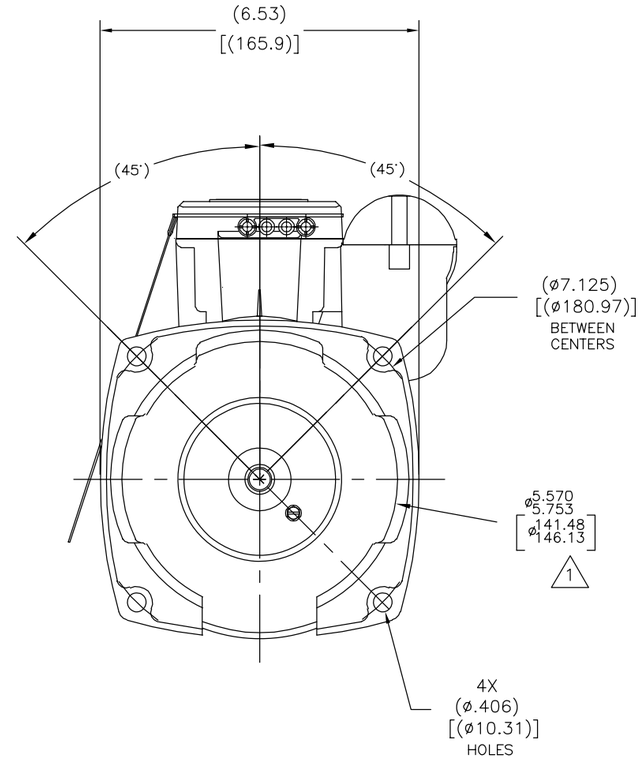

NAMEPLATE DATA

MODEL: F56AA34A01
CUST PN: BG855A
HP: 2.0 SF: 1.10
ROT: CCWPE
RPM: 3450
TYPE: CX CODE: F
FORM: FRAME: Y56Y
VOLTS: 230
AMPS:
MAX AMPS:
SF AMPS: 10.0
PH: 1 HZ: 60
INS: B AMB: 50°C
DUTY: CONT
ENCLOSURE: ODP
THERMALLY PROTECTED

EXTERNAL CONNECTION DIAGRAM

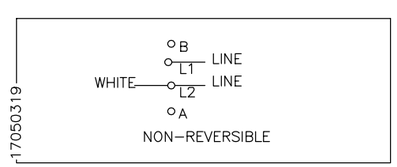

NOTES

1. PILOT DIAMETER IS CONCENTRIC WITH SHAFT CENTERLINE WITHIN .006[1.5] T.I.R.
2. FACE OF MOUNTING FLANGE IS PERPENDICULAR TO SHAFT CENTERLINE WITHIN .004[.10] T.I.R.
3. SHAFT RUNOUT NOT TO EXCEED .002[.05] T.I.R
4. FOR THREADED SHAFT EXT. MATING PARTS SHOULD BE RELIEVED ONE THREAD TO CLEAR FILLET
5. FOR THREADED SHAFT EXT. ECCENTRICITY OF THREADED PORTION OF SHAFT IS HELD WITHIN .004[.10] TOTAL GAGE READING WITH THE INDICATOR ON O.D. OF GROUND RING GAGE AS SHOWN. THE GAGE BEING STATIONARY WITH RESPECT TO THE ROTOR.
6. END PLAY NOT TO EXCEED .010[.25] MEASURED WITH NO THRUST
7. ALL DIMENSIONS SHOWN IN PARENTHESIS ARE REFERENCE DIMENSIONS.
8. FINISH PAINT TO BE SATIN BLACK

PERFORMANCE CURVE		APPROVED SAMPLE	
18014311			
UL COMPONENT		CSA	
FILE#	CCN#	FILE#	GUIDE#
PENDING	PENDING	PENDING	PENDING
CUSTOMER	DISTRIBUTION SERVICES		

DRAWING REVISION	REVISION BY	DATE
E	F.RAMIREZ	12–04–2014
ECO	APPROVED BY	DATE
ECO–0066229	J.RUIZ	12–04–2014
ECO DESCRIPTION		
SEE ECO		

COPYRIGHT REGAL BELOIT AMERICA, INC. ALL RIGHTS RESERVED.
PROPRIETARY AND CONFIDENTIAL INFORMATION – THIS DOCUMENT IS THE PROPERTY OF REGAL BELOIT AMERICA, INC. ("OWNER") AND CONTAINS OWNER'S PROPRIETARY INFORMATION. ANY PERSON, CORPORATION OR OTHER FIRM RECEIVING IT IS DEEMED, BY RECEIVING IT, TO AGREE THAT IT, AND/OR ANY PART OF IT, SHALL NOT BE DISCLOSED TO ANY PERSON, CORPORATION OR OTHER ENTITY, DUPLICATED, AND/OR USED, EXCEPT AS EXPRESSLY APPROVED IN WRITING IN ADVANCE BY OWNER. THIS DOCUMENT SHALL BE RETURNED TO OWNER UPON REQUEST. IT MAY BE SUBJECT TO CERTAIN RESTRICTIONS UNDER APPLICABLE EXPORT CONTROL LAWS AND REGULATIONS.

TOLERANCES UNLESS OTHERWISE SPECIFIED

DEC.	INCH	mm	ANGLE
.X	±0.1	[±2.5]	±0.5°
.XX	±0.02	[±0.51]	
.XXX	±0.005	[±0.127]	
.XXXX	±0.0005	[±0.0127]	

REMOVE BURRS & BREAK SHARP EDGES .003/.015 [.076/.381]
CORNER FILLETS .02 [.51]
MACHINED SURFACES 125/ INCH 3.2/ mm
mm SHOWN IN [BRACKETS]

DRAWN BY: JHENRY
DATE: 03–16–2009
APPROVED BY:
DATE:
REFERENCE
THIRD ANGLE PROJECTION

REGAL™ Regal Beloit America, Inc.

DESCRIPTION: OUTLINE
MATERIAL
PROCESS/FINISH
SIZE: C
DWG NO: BG855A
SHEET: 1