PENTAIR

THS SERIES® FILTER
BUTTERFLY VALVE STYLE FACE PIPING

INSTALLATION AND USER'S GUIDE

IMPORTANT SAFETY INSTRUCTIONS
READ AND FOLLOW ALL INSTRUCTIONS
SAVE THESE INSTRUCTIONS

TABLE OF CONTENTS

1.0 PRINCIPALS OF OPERATION 2

1.1 SINGLE TANK NORMAL OPERATION 2
1.2 SINGLE TANK DURING BACKWASH 2
1.3 DUAL TANK NORMAL OPERATION 3
1.4 DUAL TANK DURING BACKWASH 3

2.0 FACE PIPING INSTALLATION 3

2.1 SINGLE TANK FACE PIPING INSTALLATION – THS 3461 (4"- GROOVED TANK CONNECTIONS) 4
2.2 SINGLE TANK FACE PIPING INSTALLATION – THS 3484, THS 4272, THS 4284 AND THS 4296 (6" FLANGE TANK CONNECTIONS) 8
2.3 DUAL TANK FACE PIPING INSTALLATION -THS 3461 (4"- GROOVED TANK CONNECTIONS) 11
2.4 DUAL TANK FACE PIPING INSTALLATION – THS 3484, THS 4272, THS 4284 AND THS 4296 (6" FLANGE TANK CONNECTIONS) 15
2.5 INFLUENT/EFFLUENT GAUGE PANEL INSTALLATION 19

3.0 OPERATION INSTRUCTIONS 20

3.1 NORMAL FILTRATION MODE 21
3.2 SWITCHING SYSTEM TO BACKWASH MODE 22
3.2.1 Single Tank System With Influent Piping on Right of Tank 22
3.2.2 Single Tank System With Influent Piping on Left of Tank 23
3.2.3 Dual Tank System With Influent Piping on Right of Tank 24
3.2.4 Dual Tank System With Influent Piping on Left of Tank 25

APPENDIX 26

APPENDIX A 27
APPENDIX B 28

This manual covers installation and operating instructions for the optional butterfly valve style face piping kits for use with the THS SERIES® FILTER VESSEL.

⚠ WARNING

This manual contains critical safety information that must be furnished to the end user. Failure to read and follow the instructions could result in serious personal injury and/or major property damage.

Thank you for purchasing the butterfly valve style face piping kit for your THS SERIES FILTER VESSEL. This kit includes features such as pre-glued subassemblies for ease of assembly and simple operation of valves for switching to backwash mode.

This manual covers the installation and operation of face piping kits for both one and two tank filter systems. This manual also includes a trouble-shooting guide to assist with some typical problems which may occur during operation. If you should have any questions pertaining to the filter tank itself, please refer to the separate manual provided for the tanks.

Please remember to use proper safety equipment and techniques when installing this filtration system.

1.0 Principals of Operation

This section will familiarize you with how the face piping kit and valves work in order to provide a means of backwashing the filter. It will cover the flow of water in a single tank system in normal filtration and backwash modes, and a dual tank system in normal filtration and backwash modes. **Please note that the gray arrows represent influent water flow and white arrows represent effluent/waste water flow.**

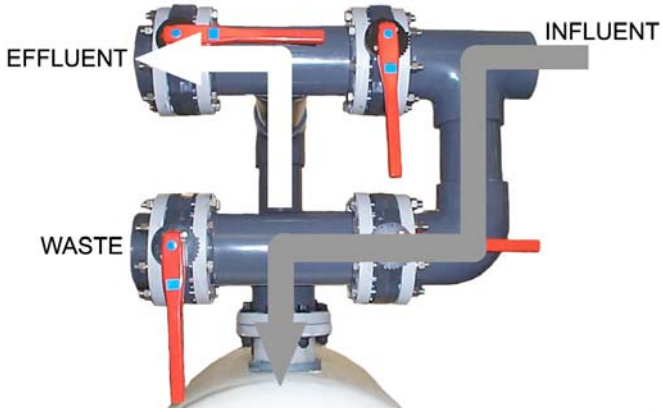

1.1 Single Tank Normal Operation

During normal filtration mode, water is passed through the influent piping and into the tank. Water is then passed through the sand, where the filtration process occurs. It is then passed through the collection laterals at the bottom of the tank. It then passes out of the effluent pipe and continues through the rest of the system.

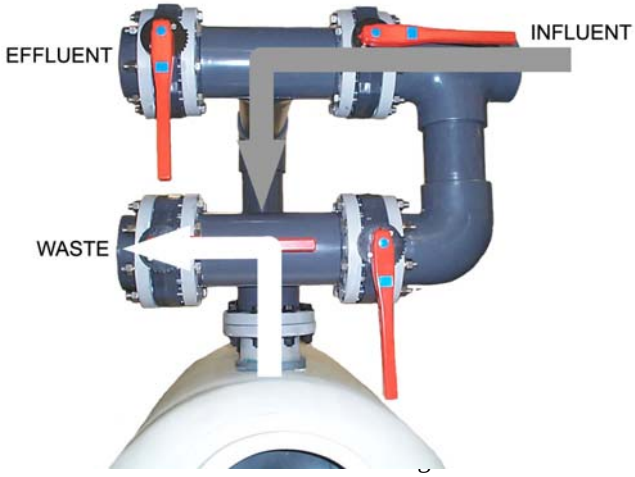

1.2 Single Tank During Backwash

During backwash mode, the butterfly valves are actuated so that a backwash cycle can be run. Since water cannot enter the tank through the influent piping, it enters through the effluent piping. The water is pushed up through the sand bed, which causes the sand bed to fluidize. This loosens dirt and debris trapped by the sand. This debris is then passed through the influent piping and exits through a waste pipe.

1.3 Dual Tank Normal Operation

During normal operation in a dual tank system, water is split between the two tanks. It passes through the influent piping and then through the sand beds. It is then passed through the collection laterals at the bottom of the tanks and passed out of the effluent piping and returned to the pool.

1.4 Dual Tank During Backwash

During backwash mode in a dual tank system, the butterfly valves are actuated so that a backwash cycle can be run. Since water cannot enter the tanks through the influent piping, it enters through the effluent piping. The water is pushed up through the sand beds, which is called "Fluidizing" the sand beds. This loosens dirt and debris trapped by the sand. This debris is then passed through the influent piping and exits through a waste pipe. On a dual tank system, both tanks backwash simultaneously.

2.0 Face Piping Installation

IMPORTANT: Installation of the face piping should occur after the filter vessels have been positioned in their permanent location. Please refer to the Tank Owner's/Operator's Manual section on locating the filter vessels. For dual tank systems, it is very important that the "C-C" dimension listed in Figure 1 on page 5 of that manual is followed. Please refer to the Tank Owner/Operators Manual for more information.

Butterfly valve face piping kits come in either one or two tank kits. The piping kits come with pre-glued subassemblies. This means that some sections of the kit will require gluing by the installer. For single tank systems there will be 2 glue joints required, dual tank systems will require 8 glue joints. All other connections that need to be made are flanged or grooved coupling connections between mating sections. Please refer to the appropriate drawings in the Appendix section at the end of this manual for aid in assembly.

IMPORTANT: When tightening flange bolts, it is important to follow a diametrically opposed pattern. This will ensure that a proper seal between the flanges is obtained. Refer to Figure 1 below for proper tightening sequence. <u>Torque all Metallic type bolts to a</u>

<u>maximum of 25 ft-lbs / Non Metallic to a maximum of 15 ft-lbs/Non Metallic.</u> Also, it may be beneficial to apply a lubricant to each bolt or nut to help relieve stress due to friction.

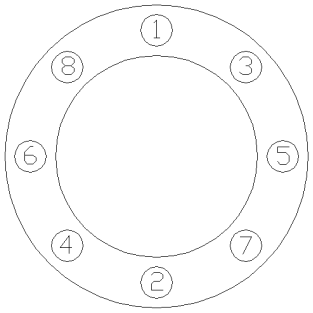

FIGURE 1

2.1 Single Tank Face Piping Installation – THS 3461 (4"- Grooved Tank Connections)

The single tank face piping kit consists of:

(4) Butterfly valves
(1) Subassembly "A"
(1) Subassembly "B1"
(1) Subassembly "B2"
(1) Subassembly "C"
(1) 90° Elbow Fitting
(2) Socket flange
(1) Gauge panel assembly
(1) Set of Mounting Brackets and Hardware
(32) Zinc plated nuts
(2) 4" Groove Coupling Assembly
(32) 6" Zinc plated bolts
(64) Zinc plated washers
(32) Lock washers
(2) 3/8" OD x ¼" MNPT quick connect fitting
3/8" OD tubing (not shown)

Prior to installation see "Grooved Coupling Assembly instruction" found on page 5.

Grooved Coupling Assembly Instruction

1) Seat rubber gasket over end of pipe 1, making sure that the gasket does not cover the groove cut in the pipe.

2) Insert end of pipe 2 into rubber gasket, again making sure that the gasket does not cover the groove in the pipe.

3) Fit coupling halves over rubber gasket making sure that coupling halves are seated into the grooves of the (2) pipes. Make sure one coupling half has standard thru bolt holes and the other has hexagonal counter-bored thru bolt holes.

Apply an anti-seize lubricant to the threads of the coupling bolts. Insert bolts into the holes in the coupling, making sure that the bolt heads fit inside the hexagonal counter-bored holes on one side of the coupling. Place one washer and nut on each bolt and tighten.

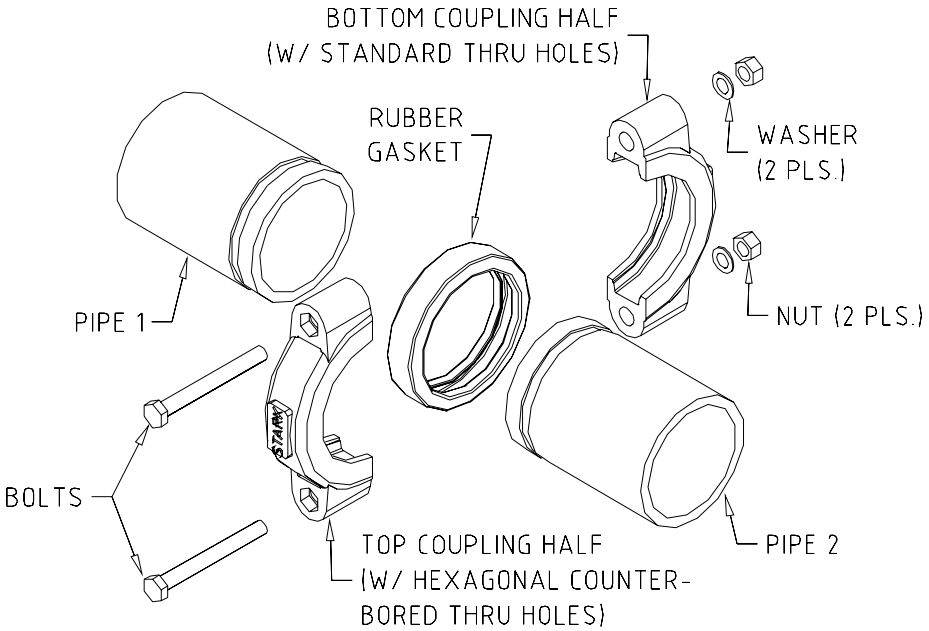

STEP 1: Influent Subassembly Installation

With gasket of Groove coupling assembly installed on influent tank grooved pipe connection, Place Subassembly “C” on to pipe connection, install groove coupling assembly. See picture at right for proper orientation. Snug the nuts to “hand tight”, but do not fully tighten. This will allow for adjustments during the remainder of the installation.

STEP 2: Effluent piping installation

With gasket of Groove coupling assembly installed on effluent tank pipe connection, Place Subassembly “B1” on to pipe connection, install groove coupling assembly. See picture at right for proper orientation. Snug the nuts to “hand tight”, but do not fully tighten. This will allow for adjustments during the remainder of the installation.

Place 90° elbow on top of effluent pipe, but DO NOT GLUE. Next place Subassembly “B2” into elbow, again DO NOT GLUE. Level the front faces of both tees on the influent and effluent assemblies. Also ensure that the tee on the effluent piping is level horizontally. Next, verify that the vertical dimension between the centerlines of both tees is 17 ¼”. In some cases adjustments or trimming of pipes may be needed. Once the piping is in its correct position, mark all of the piping as needed for trimming and gluing. Remove all components of the effluent assembly from the tank. Make any necessary trims at this time if needed. Glue all of the pieces together making sure to align all marks made previously. Use PVC cement for use with schedule 80 pipe. Please follow the cement manufacturer’s directions. Once assembly is glued and allowed ample time to cure, refit the effluent assembly on to the tank. Re-Install groove coupling assembly on the effluent flange. Snug the nuts to “hand tight”, but do not fully tighten. This will allow for adjustments during the remainder of the installation.

STEP 3: Influent Extension Installation

Install valves on the two flanges on the side of the tank that the influent piping will be coming from. Orient them so that when the valves are in the closed position, the handles are pointing down towards the ground. This means that the valve handles will rotate counter clockwise to open. Install the Subassembly "A" on to the appropriate side of the tank, depending on where the influent piping is coming from. It may be necessary to rotate the influent and effluent subassemblies slightly to properly align Subassembly "A". Install the 6" zinc plated bolts, washers, and lock washers on to the two flanges. Snug the nuts to "hand tight", but do not fully tighten.

STEP 4: Effluent/Waste Flange Installation

On the remaining two flanges install the remaining two valves. Again, orient them so that when the valves are in the closed position, the handles are pointing down towards the ground. The means that all of the valve handles will rotate counter clockwise to open. Install the socket flanges provided on to each valve. Install the 6" zinc plated bolts, washers, and lock washers on to the two flanges. Snug the nuts to "hand tight", but do not fully tighten.

STEP 5: Final Adjustments

Once all piping is in place, make necessary adjustments and fully tighten all flange bolts and groove coupling assemblies. For flange connection be sure to follow the tightening pattern explained at the beginning of Section 2.0. **Tighten all bolts <u>all Metallic type bolts to a maximum of 25 ft-lbs / Non Metallic to a maximum of 15 ft-lbs/Non Metallic.</u> Also, it may be beneficial to apply a lubricant to each bolt or nut to help relieve stress due to friction.**

Note: All piping should be fully supported with adequate bracing and hangers to prevent damage from weight and vibration.

2.2 Single Tank Face Piping Installation – THS 3484, THS 4272, THS 4284 and THS 4296 (6” Flange Tank Connections)

The single tank face piping kit consists of:

(4) Butterfly valves
(1) Subassembly “A”
(1) Subassembly “B1”
(1) Subassembly “B2”
(1) Subassembly “C”
(2) 90° Elbow Fitting
(3) Flange gaskets
(2) Socket flange
(1) Gauge panel assembly

(1) Set of Mounting Brackets and Hardware
(48) zinc plated nuts
(16) 4” zinc plated bolts
(32) 7” zinc plated bolts
(96) zinc plated washers
(48) lockwashers
(2) 3/8” OD x ¼” MNPT quick connect fitting
3/8” OD tubing (not shown)

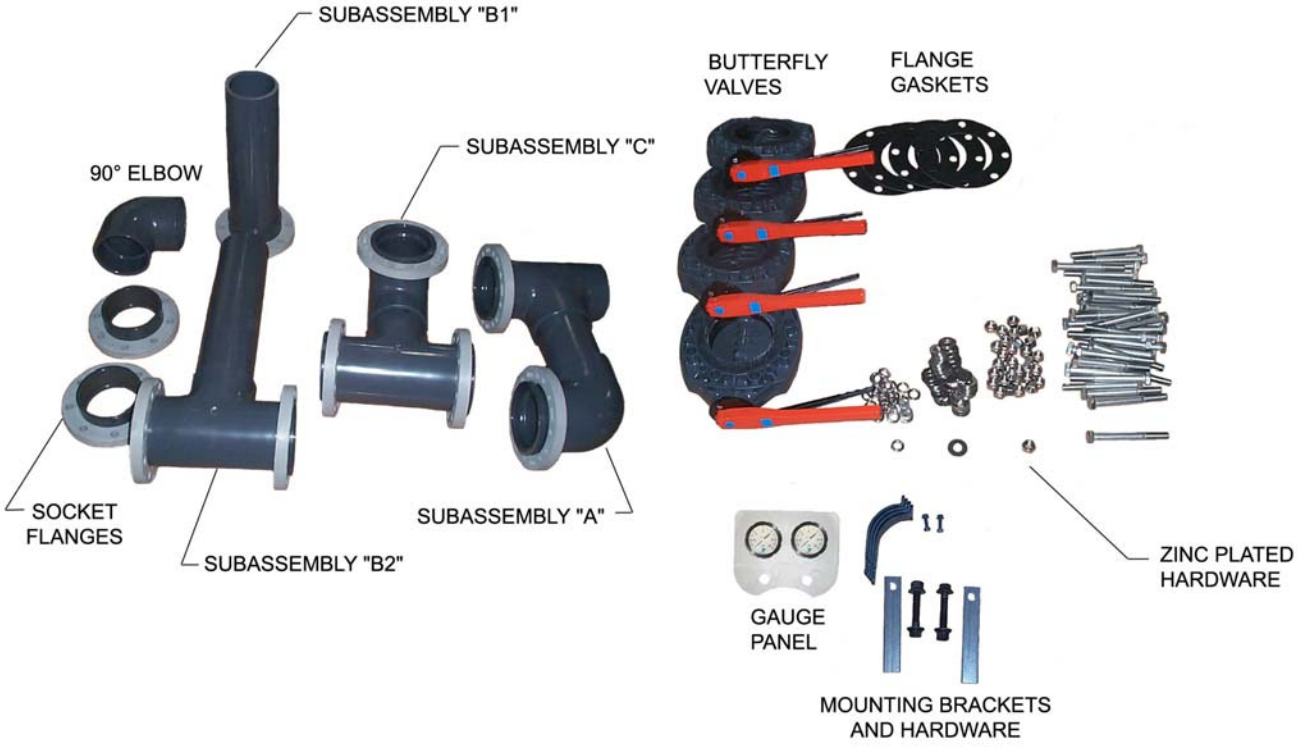

STEP 1: Influent Subassembly Installation

Place a flange gasket on the influent tank flange. Align the holes in the gasket with the holes of the flange ring on the tank. Place Subassembly “C” on to flange, making sure to align the bolt holes on the tank flange and the subassembly. See picture at right for proper orientation. Install 4” zinc plated bolts, nuts, washers, and lockwashers on the influent flange. Snug the nuts to “hand tight”, but do not fully tighten. This will allow for adjustments during the remainder of the installation.

STEP 2: Effluent piping installation

Place a flange gasket on the effluent tank flange. Align the holes in the gasket with the holes of the flange ring on the tank. Place subassembly “B1” on to the effluent tank flange, making sure to align the bolt holes of the tank flange and the subassembly. Install 4” zinc plated bolts, nuts, washers, and lockwashers on the efffluent flange. Snug the nuts to “hand tight”, but do not fully tighten.

Place 90° elbow on top of effluent pipe, but DO NOT GLUE. Next place Subassembly “B2” into elbow, again DO NOT GLUE. Level the front faces of both tees on the influent and effluent assemblies. Also ensure that the tee on the effluent piping is level horizontally. Next, verify that the vertical dimension between the centerlines of both tees is 19 ¾”. In some cases adjustments or trimming of

pipes may be needed. Once the piping is in its correct position, mark all of the piping as needed for trimming and gluing. Remove all components of the effluent assembly from the tank. Make any necessary trims at this time if needed. Glue all of the pieces together making sure to align all marks made previously. Use PVC cement for use with schedule 80 pipe. Please follow the cement manufacturer's directions. Once assembly is glued and allowed ample time to cure, refit the effluent assembly on to the tank. Make sure that the flange gasket is placed back between the flange connection on the effluent pipe from the tank. Re-Install zinc plated hardware on the effluent flange. Snug the nuts to "hand tight", but do not fully tighten. This will allow for adjustments during the remainder of the installation.

STEP 3: Influent Extension Installation

Install valves on the two flanges on the side of the tank that the influent piping will be coming from. Orient them so that when the valves are in the closed position, the handles are pointing down towards the ground. This means that the valve handles will rotate counter clockwise to open. Install the Subassembly "A" on to the appropriate side of the tank, depending on where the influent piping is coming from. It may be necessary to rotate the influent and effluent subassemblies slightly to properly align Subassembly "A". Install the 7" zinc plated bolts, washers, and lock washers on to the two flanges. Snug the nuts to "hand tight", but do not fully tighten.

STEP 4: Effluent/Waste Flange Installation

On the remaining two flanges install the remaining two valves. Again, orient them so that when the valves are in the closed position, the handles are pointing down towards the ground. The means that all of the valve handles will rotate counter clockwise to open. Install the socket flanges provided on to each valve. Install the 7" zinc plated bolts, washers, and lock washers on to the two flanges. Snug the nuts to "hand tight", but do not fully tighten.

STEP 5: Final Adjustments

Once all piping is in place, make necessary adjustments and fully tighten all flange bolts. Be sure to follow the tightening pattern explained at the beginning of Section 2.0.
Tighten all Metallic type bolts to a maximum of 25 ft-lbs / Non Metallic to a maximum of 15 ft-lbs/Non Metallic. Also, it may be beneficial to apply a lubricant to each bolt or nut to help relieve stress due to friction.

Note: All piping should be fully supported with adequate bracing and hangers to prevent damage from weight and vibration.

2.3 Dual Tank Face Piping Installation -THS 3461 (4”- Grooved Tank Connections)

The dual tank face piping kit consists of:

(4) Butterfly valves
(1) Subassembly “A”
(2) Subassembly “B1”
(2) Subassembly “B2”
(2) Subassembly “C”
(2) 6” x 33 1/2” pipe
(2) 90° Elbow Fitting
(4) Grooved Couplings
(2) Socket flange

(1) Gauge panel assembly
(1) Set of Mounting Brackets and Hardware
(32) Zinc plated nuts
(64) Zinc plated washers
(32) Lock washers
(32) 6” Zinc plated bolts
(2) 3/8” OD x ¼” MNPT quick connect fitting
3/8” OD tubing (not shown)

Prior to installation see “Grooved Coupling Assembly instruction” found on page 5.

STEP 1: Level the Tanks

Make sure influent and effluent pipe connections on each tank are level. Shimming may be required to bring the tanks to level with each other. Use a non-compressible material placed under the tank saddles. Further leveling may require the saddles to be adjusted. Please refer to page 5 of the Tank Owner's/Operator's Manual for more information.

STEP 2: Glue Influent Piping

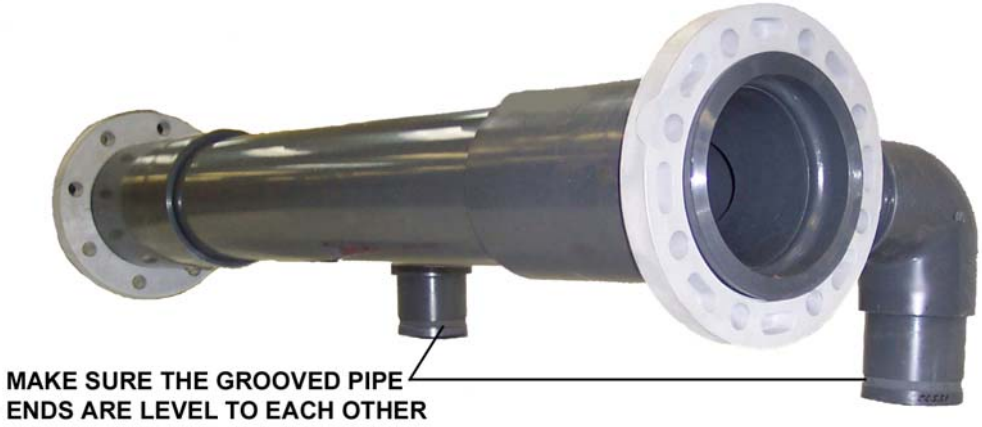

Dry fit the influent assembly together as shown in the picture. The assembly consists of two Subassembly "C" and a piece of 6" pipe approx. 33 1/2" long Make sure that the grooved pipe connections on the elbow portion of each assembly sit level with each other, and that the centerline distance between these flanges is equal to the centerline distance between the tanks. Mark all piping as needed for trimming and gluing. Make any necessary trims at this time if needed. Glue all of the pieces together making sure to align all marks made previously. Use PVC cement for use with schedule 80 pipe. Please follow the cement manufacturer's directions. Once assembly is glued and allowed ample time to cure.

STEP 3: Install Influent Piping

With gasket of Groove coupling assembly installed on influent tank grooved pipe connection of each tank, place influent assembly on to pipe connection, install groove coupling assembly. See picture at right for proper orientation. Snug the nuts to "hand tight", but do not fully tighten. This will allow for adjustments during the remainder of the installation.

STEP 4: Effluent piping installation

With gasket of Groove coupling assembly installed on effluent tank pipe connection of each tank, Place Subassembly “B1” on to pipe connection, install groove coupling assembly. See picture at right for proper orientation. Snug the nuts to “hand tight”, but do not fully tighten. This will allow for adjustments during the remainder of the installation.

Place 90° elbows on top of effluent pipes, but DO NOT GLUE. Next place (2) Subassembly “B2” into the elbows, DO NOT GLUE. Insert 6” pipe approx. 33 1/2” long into the open sides of the tees, DO NOT GLUE. See picture at right. Level the front faces of both sets of tees on the influent and effluent assemblies (shown in picture at right). Also ensure that the tees and pipe of the effluent assembly is level horizontally. Next, verify that the flanges on the influent and effluent piping are level vertically on both sides of the piping kit Verify that the vertical dimension between the centerlines of the piping is 19 ¾”. In some special cases adjustments or trimming may be needed. Once the piping is in its correct position, mark all of the piping as needed for trimming and gluing. Remove all components of the effluent assembly from the tank. Make any necessary trims at this time if needed. Glue all of the pieces together making sure to align all marks made previously. Use PVC cement for use with schedule 80 pipe. Please follow the cement manufacturer’s directions.

Once assembly is glued and allowed ample time to cure, refit the effluent assembly on to the tanks. With gasket of Groove coupling assembly installed on effluent tank grooved pipe connection of each tank, place effluent assembly on to pipe connection, install groove coupling assembly. See picture at right for proper orientation. Snug the nuts to “hand tight”, but do not fully tighten. This will allow for adjustments during the remainder of the installation.

STEP 5: Influent Extension Installation

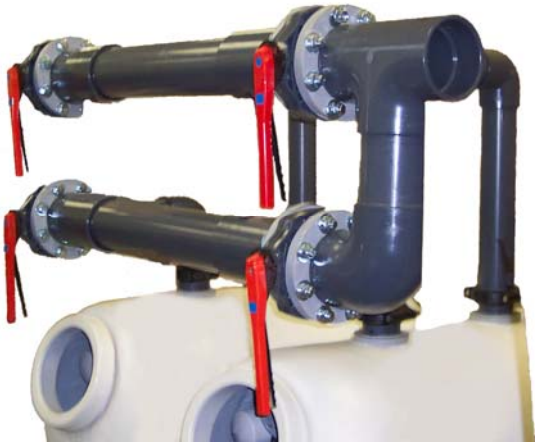

Install valves on to the two flanges on the side of the tanks that the influent piping will be coming from. Orient them so that when the valves are in the closed position, the handles are pointing down towards the ground. This means that the valve handles will rotate counter clockwise to open. Install the Subassembly “C” on to the appropriate side of the tank, depending on where the influent piping is coming from. Install the 7” zinc plated bolts, washers, and lock washers on to the

two flanges. Snug the nuts to “hand tight”, but do not fully tighten.

STEP 6: Effluent/Waste Flange Installation

On the remaining two flanges install the remaining two valves. Again, orient them so that when the valves are in the closed position, the handles are pointing down towards the ground. The means that all of the valve handles will rotate counter clockwise to open. Install the socket flanges provided on to each valve. Install the 7” zinc plated bolts, washers, and lock washers on to the two flanges. Snug the nuts to “hand tight”, but do not fully tighten.

STEP 7: Final Adjustments

Once all piping is in place, make necessary adjustments and fully tighten all flange bolts. Be sure to follow the tightening pattern explained at the beginning of Section 2.0. **Tighten all Metallic type bolts to a maximum of 25 ft-lbs / Non Metallic to a maximum of 15 ft-lbs/Non Metallic. Also, it may be beneficial to apply a lubricant to each bolt or nut to help relieve stress due to friction.**

Note: All piping should be fully supported with adequate bracing and hangers to prevent damage from weight and vibration.

2.4 Dual Tank Face Piping Installation – THS 3484, THS 4272, THS 4284 and THS 4296 (6” Flange Tank Connections)

The dual tank face piping kit consists of:

(4) Butterfly valves
(1) Subassembly “A”
(2) Subassembly “B1”
(2) Subassembly “B2”
(2) Subassembly “C”
(2) 6” x 38 9/16” pipe
(2) 90° Elbow Fitting
(5) Flange gaskets
(2) Socket flange
(1) Gauge panel assembly

(1) Set of Mounting Brackets and Hardware
(32) 4” zinc plated bolts
(64) zinc plated nuts
(32) 7” zinc plated bolts
(128) zinc plated washers
(64) lockwashers
(2) 3/8” OD x ¼” MNPT quick connect fitting
3/8” OD tubing (not shown)

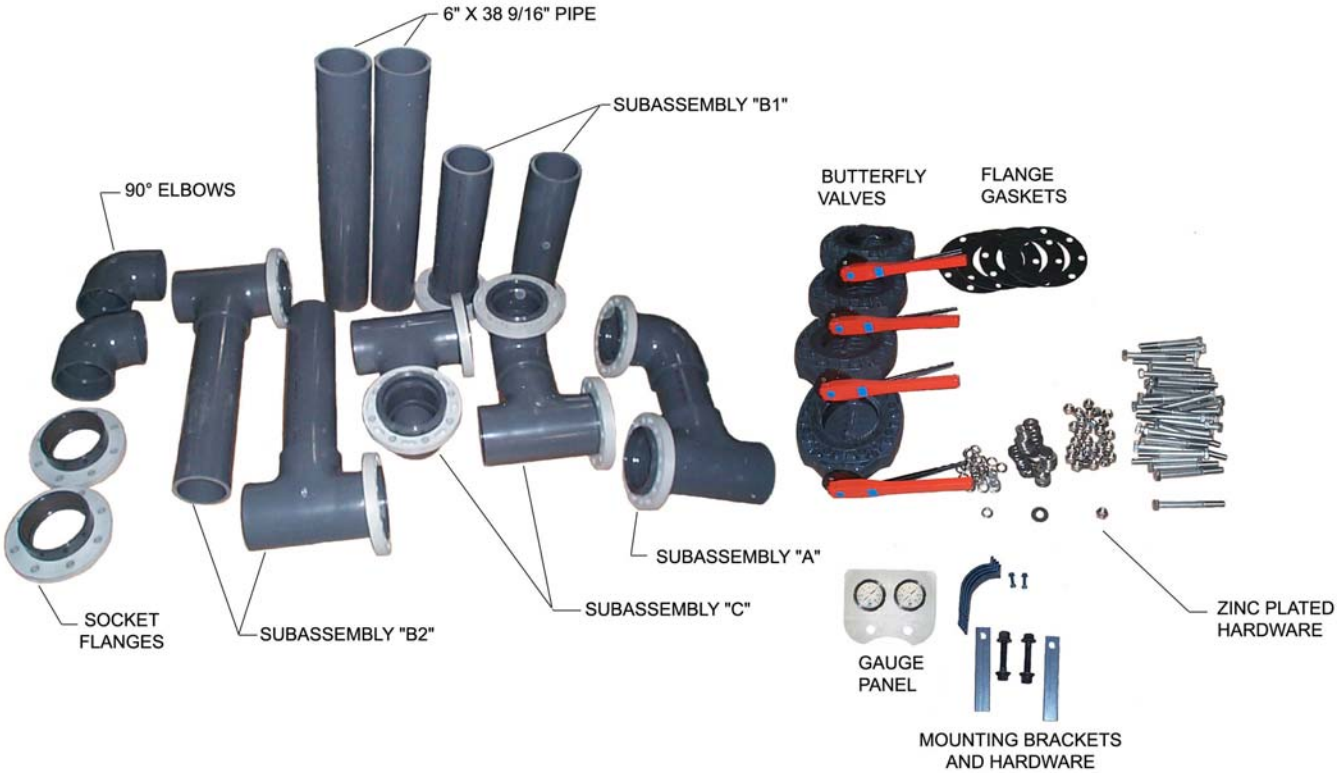

STEP 1: Level the Tanks

Make sure influent and effluent flanges on each tank are level. Shimming may be required to bring the tanks to level with each other. Use a non-compressible material placed under the tank saddles. Further leveling may require the saddles to be adjusted. Please refer to page 5 of the Tank Owner's/Operator's Manual for more information.

STEP 2: Glue Influent Piping

Dry fit the influent assembly together as shown in the picture. The assembly consists of two Subassembly "C" and a piece of 6" pipe approx. 38 9/16" long (**Field trimming is required for 34" tanks**). Make sure that the flanges on the elbow portion of each assembly sit level with each other, and that the centerline distance between these flanges is equal to the centerline distance between the tanks. Mark all piping as needed for trimming and gluing. Glue all pieces together using PVC cement for use with schedule 80 pipe. Please follow the cement manufacturer's directions.

STEP 3: Install Influent Piping

Place flange gaskets on the influent flange of each tank. Align the holes in the gaskets with the holes of the flange rings on each tank. Place the influent assembly on to flanges, making sure to align the bolt holes on the tank flanges and the subassembly. See picture at right for proper orientation. Install 4" zinc plated bolts, nuts, washers, and lockwashers on the influent flanges. Snug the nuts to "hand tight", but do not fully tighten. This will allow for adjustments during the remainder of the installation.

STEP 4: Effluent piping installation

Place a flange gasket on the effluent tank flanges. Align the holes in the gaskets with the holes of the flange rings on the tanks. Place a Subassembly "B1" on each tanks effluent flange, making sure to align the bolt holes of the tank flanges and the subassemblies. Install 4" zinc plated bolts, nuts, washers, and lockwashers on the effluent flanges. Snug the nuts to "hand tight", but do not fully tighten.

Place 90° elbows on top of effluent pipes, but DO NOT GLUE. Next place (2) Subassembly "B2" into the elbows, DO NOT GLUE. Insert 6" pipe approx. 38 9/16" long into the open sides of the tees, DO NOT GLUE (**Field trimming is required for 34" tanks**). See picture at right. Level the front faces of both sets of tees on the influent and effluent assemblies (shown in picture at right). Also ensure that the tees and pipe of the effluent assembly is level horizontally. Next, verify that the flanges on the influent and effluent piping are level vertically on both sides of the piping kit (shown in bottom right picture). Verify that the vertical dimension between the centerlines of the piping is 19 ¾". In some special cases adjustments or trimming may be needed. Once the piping is in its correct position, mark all of the piping as needed for trimming and gluing. Remove all components of the effluent assembly from the tank. Make any necessary trims at this time if needed. Glue all of the pieces together making sure to align all marks made previously. Use PVC cement for use with schedule 80 pipe. Please follow the cement manufacturer's directions.

Once assembly is glued and allowed ample time to cure, refit the effluent assembly on to the tanks. Make sure that the flange gaskets are placed back between the flange connections on the effluent pipe from the tanks. Re-Install zinc plated hardware on the effluent flanges. Snug the nuts to “hand tight”, but do not fully tighten. This will allow for adjustments during the remainder of the installation.

STEP 5: Influent Extension Installation

Install valves on to the two flanges on the side of the tanks that the influent piping will be coming from. Orient them so that when the valves are in the closed position, the handles are pointing down towards the ground. This means that the valve handles will rotate counter clockwise to open. Install the Subassembly “C” on to the appropriate side of the tank, depending on where the influent piping is coming from. Install the 7” zinc plated bolts, washers, and lock washers on to the two flanges. Snug the nuts to “hand tight”, but do not fully tighten.

STEP 6: Effluent/Waste Flange Installation

On the remaining two flanges install the remaining two valves. Again, orient them so that when the valves are in the closed position, the handles are pointing down towards the ground. The means that all of the valve handles will rotate counter clockwise to open. Install the socket flanges provided on to each valve. Install the 7" zinc plated bolts, washers, and lock washers on to the two flanges. Snug the nuts to "hand tight", but do not fully tighten.

STEP 7: Final Adjustments

Once all piping is in place, make necessary adjustments and fully tighten all flange bolts. Be sure to follow the tightening pattern explained at the beginning of Section 2.0. **Tighten all Metallic type bolts to a maximum of 25 ft-lbs / Non Metallic to a maximum of 15 ft-lbs/Non Metallic. Also, it may be beneficial to apply a lubricant to each bolt or nut to help relieve stress due to friction.**

2.5 Influent/Effluent Gauge Panel Installation

The gauge panel assembly is the same for both single and dual tank systems. It is used to monitor the influent and effluent pressures in the filter system, which will help in determining when to perform a backwash cycle. The panel is provided with mounting hardware to accommodate 6" piping, and should be mounted so that the gauges can be easily be viewed by the operator.

STEP 1: Attach the Gauge Panel Supports

Attach controller supports to the gauge panel assembly using the ¾" isoplast nuts and bolts. Attach so the channel side of the supports is away from the gauge panel. Tighten bolts, but do not over tighten, this may crack the face of the gauge panel.

STEP 2: Attach Gauge Panel to Piping

Insert notched end of pipe clamps into the channel of the controller supports. Place the straps on the assembly over the pipe. Slide remaining pipe clamps into the bottom of the controller supports. Use the nuts and bolts supplied to tighten the clamps on to the pipe.

STEP 3: Attach Tubing to Gauges

Drill and tap for ¼" NPT hole on the influent and effluent pipes from the filter system. Install quick connect fittings into pipe. **Be sure to use pipe thread sealant tape on threads.** Install 3/8" OD tube from fittings to rear of gauge panel assembly. Connect tubes into correct gauge on rear of panel (gauges faces are labeled accordingly).

3.0 Operation Instructions

The butterfly valve style face piping kits are designed for simple operation and maintenance. Backwashing is accomplished by opening and closing a group of four butterfly valves. The systems backwash all tanks simultaneously.

Backwashing is the process which is used to clean the filter tanks. There are many ways to determine when to backwash the filters as explained in the Tank Owner's/Operator's Manual, however, the method that is most commonly used is the pressure differential method (see Section 4.1 of the tank manual). Both single tank and dual tank face piping kits offer gauges to monitor influent and effluent pressures to make determining when to backwash easy.

3.1 Normal Filtration Mode

The pictures below show the correct positioning of the butterfly valves for normal filtration. Picture A shows the positioning for a tank with the influent piping on the right side of the tank for a single tank system. Picture B shows the positioning with the influent piping on the left side of the tank for a single tank system. Picture C shows the positioning for a tank with the influent piping on the right side of the tank for a dual tank system. Picture D shows the positioning with the influent piping on the left side of the tank for a dual tank system.

PICTURE A

PICTURE B

PICTURE C

PICTURE D

3.2 Switching System to Backwash Mode

The following are the steps to initiate a backwash cycle with either a single or dual tank system using a butterfly valve face piping kit. Since the piping kits can be set up to receive influent water from either side of the tanks, this changes the valve layout slightly. Because of this the process will be explained twice. Once for the influent water coming from the right side of the tank, and once for the influent water coming from the left side of the tank.

NOTE: Before actuating the butterfly valves, it is recommended that the filter feed pump be turned off. Make sure all isolation valves to the feed pump are in their open position. Further, although the valves can be actuated in any order, the following instructions represent the suggested order of operation.

3.2.1 Single Tank System With Influent Piping on Right of Tank

The following instructions explain how to put a single tank system, with the influent piping on the right of the tank, into backwash mode.

STEP 1: Open Valve 1

STEP 2: Close Valve 2

STEP 3: Open Valve 3

STEP 4: Close Valve 4

STEP 5: Backwash Tanks

STEP 6: Return valves to normal operating positions in reverse order

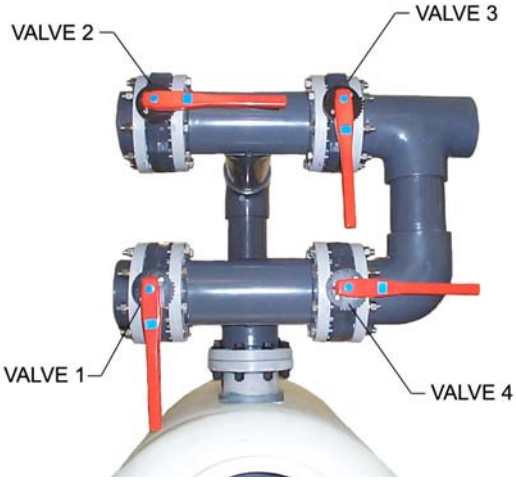

Single Tank System Piping at Right (Filter Mode)

In backwash mode, the valves should look like the picture at right. When backwashing is completed, the valves should be actuated in the reverse order.

Single Tank System Piping at Right (Backwash Mode)

3.2.2 Single Tank System With Influent Piping on Left of Tank

The following instructions explain how to put a single tank system, with the influent piping on the left of the tank, into backwash mode.

STEP 1: Open Valve 1

STEP 2: Close Valve 2

STEP 3: Open Valve 3

STEP 4: Close Valve 4

STEP 5: Backwash Tanks

STEP 6: Return valves to normal operating positions in reverse order

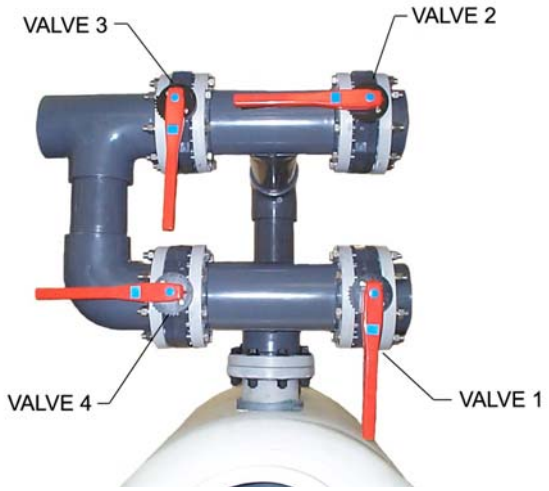

Single Tank System Piping at Left (Filter Mode)

In backwash mode, the valves should look like the picture at right. When backwashing is completed, the valves should be actuated in the reverse order.

Single Tank System Piping at Left (Backwash Mode)

3.2.3 Dual Tank System With Influent Piping on Right of Tank

The following instructions explain how to put a dual tank system, with the influent piping on the right of the tank, into backwash mode.

STEP 1: Open Valve 1

STEP 2: Close Valve 2

STEP 3: Open Valve 3

STEP 4: Close Valve 4

STEP 5: Backwash Tanks

STEP 6: Return valves to normal operating positions in reverse order

Dual Tank System Piping at Right (Filter Mode)

In backwash mode, the valves should look like the picture at right. When backwashing is completed, the valves should be actuated in the reverse order.

Dual Tank System Piping at Right (Backwash Mode)

3.2.4 Dual Tank System With Influent Piping on Left of Tank

The following instructions explain how to put a dual tank system, with the influent piping on the left of the tank, into backwash mode.

STEP 1: Open Valve 1

STEP 2: Close Valve 2

STEP 3: Open Valve 3

STEP 4: Close Valve 4

STEP 5: Backwash Tanks

STEP 6: Return valves to normal operating positions in reverse order

Dual Tank System Piping at Left (Filter Mode)

In backwash mode, the valves should look like the picture at right.
When backwashing is completed, the valves should be actuated in the reverse order.

Dual Tank System Piping at Left (Backwash Mode)

APPENDIX

APPENDIX A	TROUBLE SHOOTING
APPENDIX B	SPECIFICATION SHEETS

APPENDIX A

Problem	Possible Cause	Solution
High differential pressure reading after backwash	1. Tanks not backwashed for sufficient amount of time	Repeat the procedure for backwashing the tank(s), making sure to allow the tanks to backwash for at least 5 minutes.
	2. Not enough water flow through tanks	Ensure that all valves are in their proper position for backwash. Make sure the valve leading to the effluent piping is fully closed and sealed.
Leaking through waste pipe in normal filtration mode	1. Waste valve not closed or obstructed	Ensure that the butterfly valve on the waste side of the piping is fully closed and sealed. If necessary, make sure that all sealing surfaces on the valve are free of debris

APPENDIX B

NOTES:

1. TOTAL FILTRATION AREA: 13.5 SQ. FT.
2. SYSTEM IS SHOWN WITH OPTIONAL FACE-PIPING KIT (155702).
3. DIMENSIONS ARE IN INCHES. DIMENSIONS ARE APPROXIMATE. DO NOT PRESET ANCHORS.
4. ALL PIPING MUST BE SUPPORTED WITH ADEQUATE BRACING AND HANGERS (BY OTHERS) TO PREVENT DAMAGE FROM WEIGHT AND VIBRATION.
5. SOME CONNECTIONS MUST BE SOLVENT WELDED IN FIELD (BY OTHERS) TO ACCOUNT FOR FIELD TOLERANCES AND FOR SHIPPING PURPOSES. USE APPROPRIATE NSF APPROVED PVC CEMENT AND PRIMER.

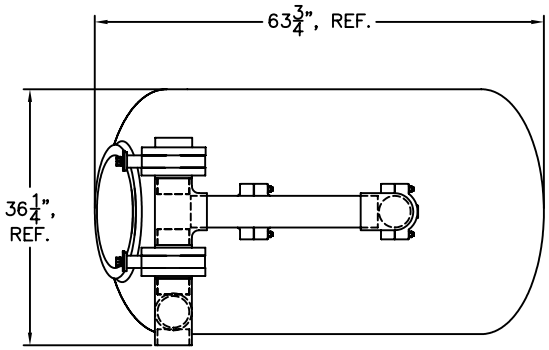

PLAN VIEW

		Max Flow Rates			Media Requirements							
Model	Filter Area (ft^2)	Flow Rate @ 10 GPM/ft^2 (GPM)	Flow Rate @ 15 GPM/ft^2 (GPM)	Flow Rate @ 20 GPM/ft^2 (GPM)	Sand Media (ft^2)	Gravel Media (ft^2)	Total Media (ft^2)	Freeboard Height (in.)	Sand Bed Depth (in.)	Gravel Depth (in.)	Operating Weight (lbs.)	Shipping Weight (lbs.)
THS3461	13.5	135	202.5	270	12.5 (1250 lbs.)	3.0 (300 lbs.)	15.5 (1550 lbs.)	7 1/2	9	8 5/16	3496	530

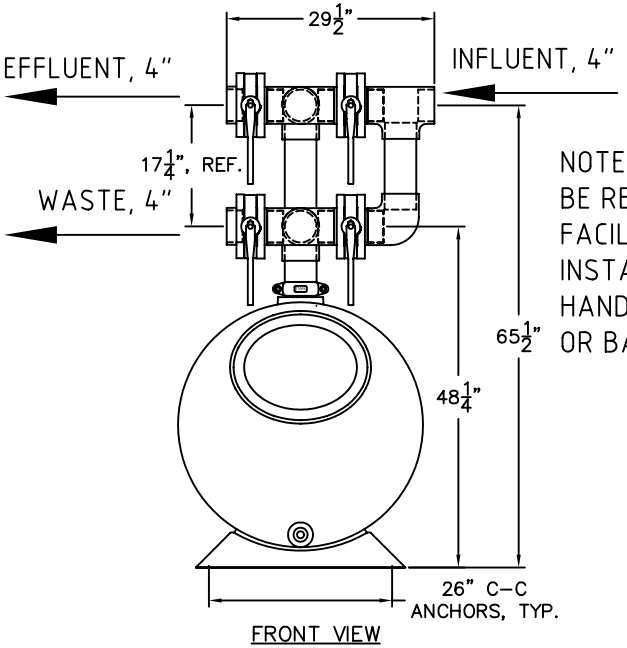

FRONT VIEW

NOTE: DIRECTION OF PIPING MAY BE REVERSED TO ACCOMMODATE FACILITY REQUIREMENTS. REFER TO INSTALLATION MANUAL FOR PROPER VALVE HANDLE POSITION FOR EITHER FILTER OR BACKWASH POSITION.

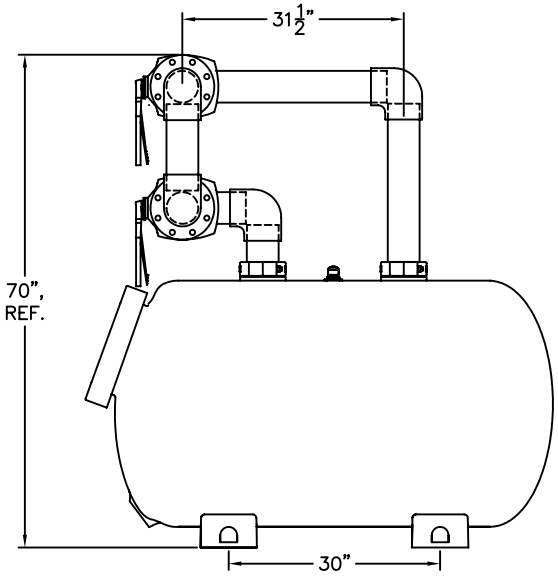

SIDE VIEW

This data represents the latest knowledge available to us at time of presentation. However Paragon Aquatics and others involved in gathering and presenting this drawing assume no liability for its use.

© 2011 Paragon Aquatics

Pentair Water
Commercial Pool and Spa™
Sanford, NC / Moorpark, CA 800-831-7133

Drawn by: JP	Date: 9/23/05	Title: SPECIFICATIONS FOR SINGLE (THS3461) SMOOTHIE TANK "BUTTERFLY VALVE OPTIONAL FACE PIPING KIT" WITH 4" CONNECTIONS	
Approved by: JP	Date: 2/9/11	Drawing Number: SS-155702	Rev Ltr: A / Sheet: 1 of 1

NOTES:
1. TOTAL FILTRATION AREA: 19 SQ. FT.
2. SYSTEM IS SHOWN WITH OPTIONAL FACE-PIPING KIT (155700).
3. DIMENSIONS ARE IN INCHES. DIMENSIONS ARE APPROXIMATE. DO NOT PRESET ANCHORS.
4. ALL PIPING MUST BE SUPPORTED WITH ADEQUATE BRACING AND HANGERS (BY OTHERS) TO PREVENT DAMAGE FROM WEIGHT AND VIBRATION.
5. SOME CONNECTIONS MUST BE SOLVENT WELDED IN FIELD (BY OTHERS) TO ACCOUNT FOR FIELD TOLERANCES AND FOR SHIPPING PURPOSES. USE APPROPRIATE NSF APPROVED PVC CEMENT AND PRIMER.

		Max Flow Rates			Media Requirements					
Model	Filter Area (ft^2)	Flow Rate @ 10 GPM/ft^2 (GPM)	Flow Rate @ 15 GPM/ft^2 (GPM)	Flow Rate @ 20 GPM/ft^2 (GPM)	Sand Media (ft^2)	Gravel Media (ft^2)	Total Media (ft^2)	Freeboard Height (in.)	Sand Bed Depth (in.)	Gravel Depth (in.)
THS3484	19.0	190	285	380	13.5 (1350 lbs.)	6.0 (600 lbs.)	19.5 (1950 lbs.)	7 1/2	9	8 5/16

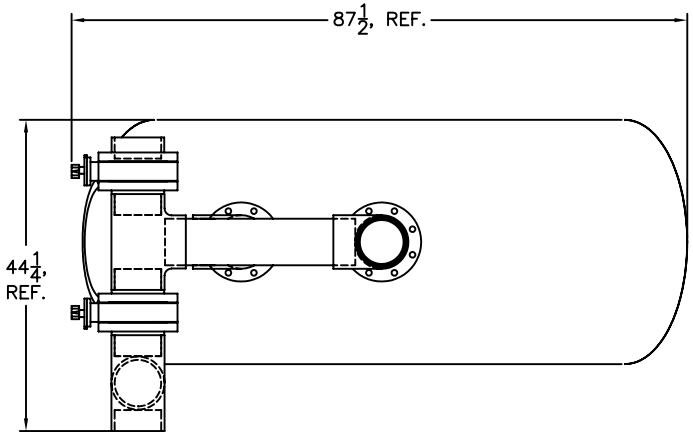

PLAN VIEW

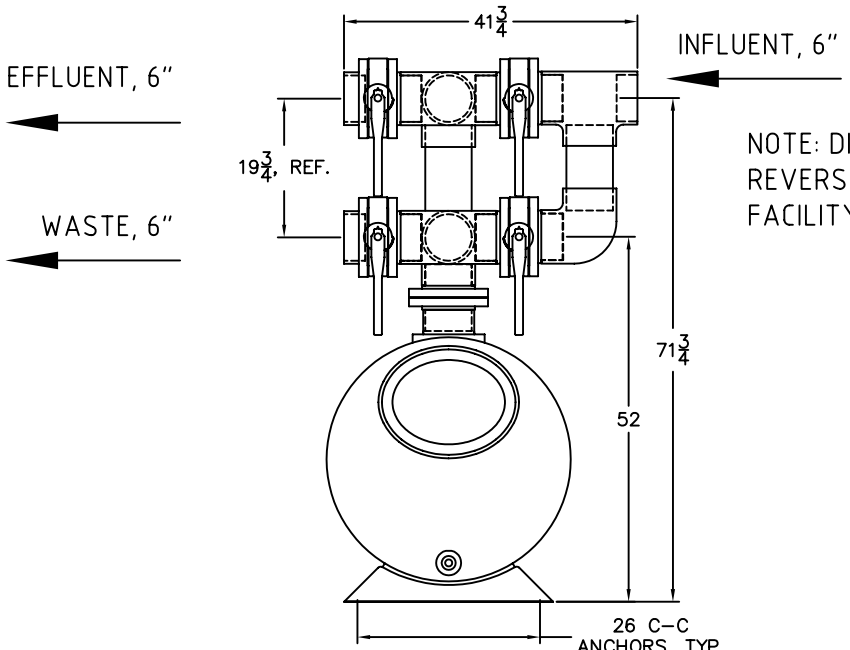

FRONT VIEW

NOTE: DIRECTION OF PIPING MAY BE REVERSED TO ACCOMMODATE FACILITY REQUIREMENTS.

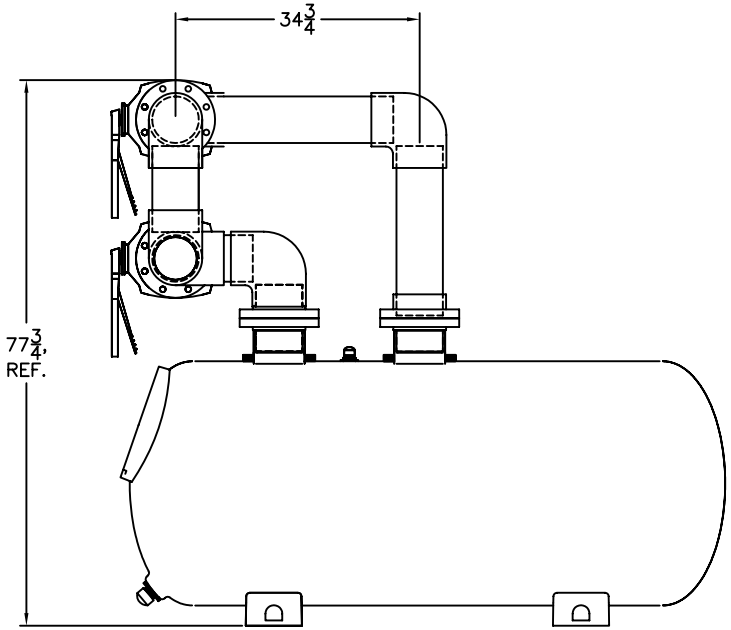

SIDE VIEW

This data represents the latest knowledge available to us at time of presentation. However Paragon Aquatics and others involved in gathering and presenting this drawing assume no liability for its use.

© 2011 Paragon Aquatics

Pentair Water
Commercial Pool and Spa™
Sanford, NC / Moorpark, CA 800-831-7133

Drawn by: JP	Date: 2/21/02	Title: SPECIFICATIONS FOR SINGLE (34") SMOOTHIE TANK "BUTTERFLY VALVE OPTIONAL FACE PIPING KIT" WITH 6" CONNECTIONS		
Approved by: JP	Date: 2/15/11	Drawing Number: SS-THS1-4 (34")	Rev Ltr: C	Sheet: 1 of 1

NOTES:

1. TOTAL FILTRATION AREA: (see matrix)
2. SYSTEM IS SHOWN WITH OPTIONAL FACE-PIPING KIT (155700).
3. DIMENSIONS ARE IN INCHES. DIMENSIONS ARE APPROXIMATE. DO NOT PRESET ANCHORS.
4. ALL PIPING MUST BE SUPPORTED WITH ADEQUATE BRACING AND HANGERS (BY OTHERS) TO PREVENT DAMAGE FROM WEIGHT AND VIBRATION.
5. SOME CONNECTIONS MUST BE SOLVENT WELDED IN FIELD (BY OTHERS) TO ACCOUNT FOR FIELD TOLERANCES AND FOR SHIPPING PURPOSES. USE APPROPRIATE NSF APPROVED PVC CEMENT AND PRIMER.

		Max Flow Rates			Media Requirements					
Model	Filter Area (ft^2)	Flow Rate @ 10 GPM/ft^2 (GPM)	Flow Rate @ 15 GPM/ft^2 (GPM)	Flow Rate @ 20 GPM/ft^2 (GPM)	Sand Media (ft^2)	Gravel Media (ft^2)	Total Media (ft^2)	Freeboard Height (in.)	Sand Bed Depth (in.)	Gravel Depth (in.)
THS4272	19.7	197	296	394	21.0 (2100 lbs.)	5.0 (500 lbs.)	26.0 (2600 lbs.)	9 1/2	15	7 1/2
THS4284	23.2	232	348	464	24.0 (2400 lbs)	6.0 (600 lbs.)	30.0 (3000 lbs.)			
THS4296	26.7	267	401	534	28.0 (2800 lbs.)	7.0 (700 lbs.)	35.0 (3500 lbs.)			

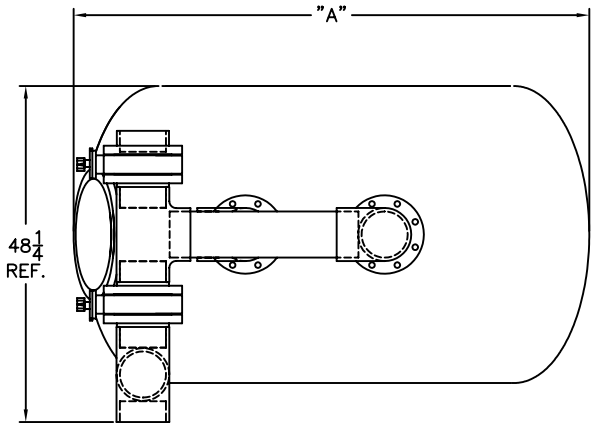

PLAN VIEW

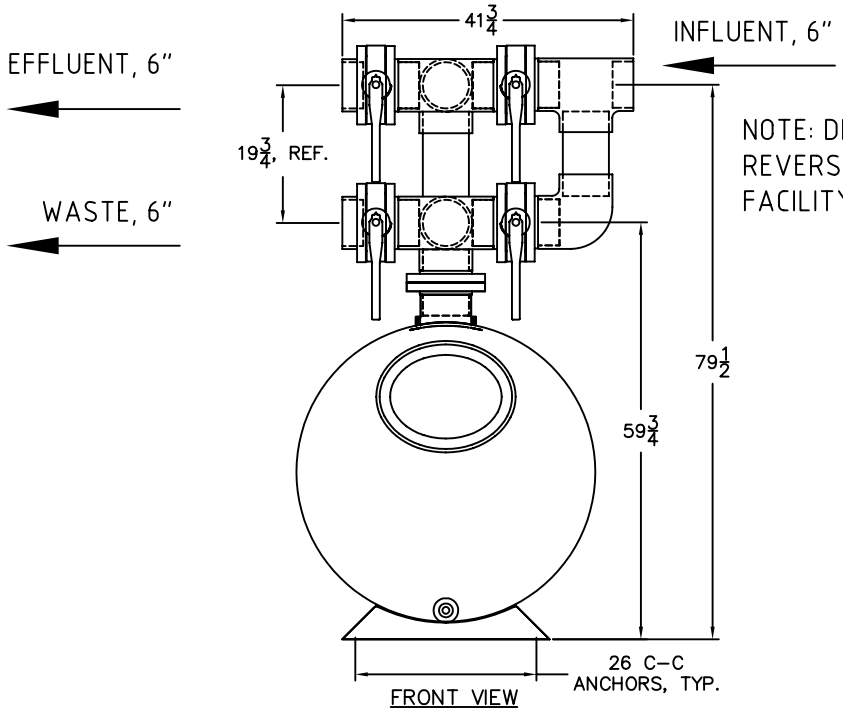

FRONT VIEW

NOTE: DIRECTION OF PIPING MAY BE REVERSED TO ACCOMMODATE FACILITY REQUIREMENTS.

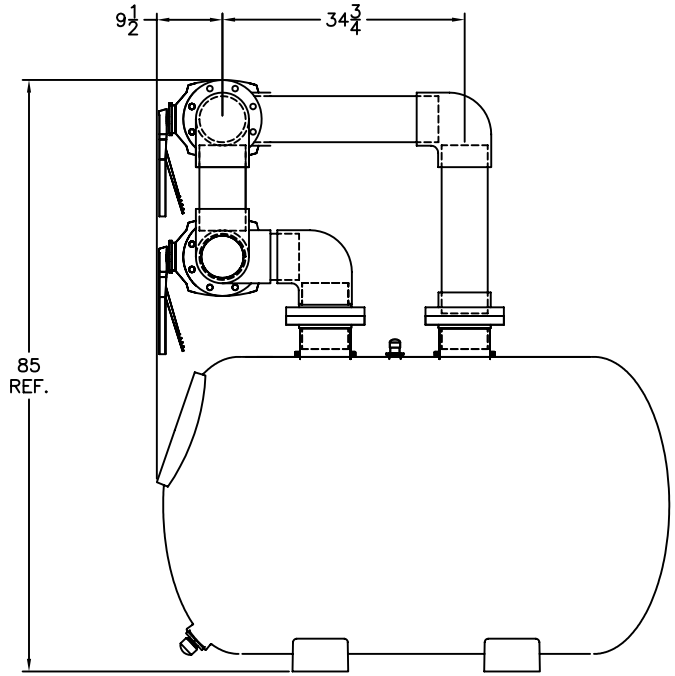

SIDE VIEW

This data represents the latest knowledge available to us at time of presentation. However Paragon Aquatics and others involved in gathering and presenting this drawing assume no liability for its use.

© 2011 Paragon Aquatics

Pentair Water
Commercial Pool and Spa™
Sanford, NC / Moorpark, CA 800-831-7133

Drawn by: JP	Date: 8/3/01	Title: SPECIFICATIONS FOR SINGLE (42") SMOOTHIE TANK "BUTTERFLY VALVE OPTIONAL FACE PIPING KIT" WITH 6" CONNECTIONS		
Approved by: JP	Date: 2/15/11	Drawing Number: SS-THS1-3 (42")	Rev Ltr: C	Sheet: 1 of 1

NOTES:

1. TOTAL FILTRATION AREA: 27 SQ. FT.
2. THIS FACE PIPING-KIT IS DESIGNED FOR A MAXIMUM FLOW RATE OF 800 GPM.
3. SYSTEM IS SHOWN WITH OPTIONAL FACE-PIPING KIT (155722).
4. DIMENSIONS ARE IN INCHES. DIMENSIONS ARE APPROXIMATE. DO NOT PRESET ANCHORS.
5. ALL PIPING MUST BE SUPPORTED WITH ADEQUATE BRACING AND HANGERS (BY OTHERS) TO PREVENT DAMAGE FROM WEIGHT AND VIBRATION.
6. SOME CONNECTIONS MUST BE SOLVENT WELDED IN FIELD (BY OTHERS) TO ACCOUNT FOR FIELD TOLERANCES AND FOR SHIPPING PURPOSES.. USE APPROPRIATE NSF APPROVED PVC CEMENT AND PRIMER.

		Max Flow Rates			Media Requirements (for Two Tanks)					
Model	Filter Area (ft^2)	Flow Rate @ 10 GPM/ft^2 (GPM)	Flow Rate @ 15 GPM/ft^2 (GPM)	Flow Rate @ 20 GPM/ft^2 (GPM)	Sand Media (ft^3)	Gravel Media (ft^3)	Total Media (ft^3)	Freeboard Height (in.)	Sand Bed Depth (in.)	Gravel Depth (in.)
THS3461	27 (13.5 per tank)	270	405	540	25.0 (2500 lbs.)	6.0 (600 lbs.)	31.0 (3100 lbs.)	7 1/2	9	8 5/16

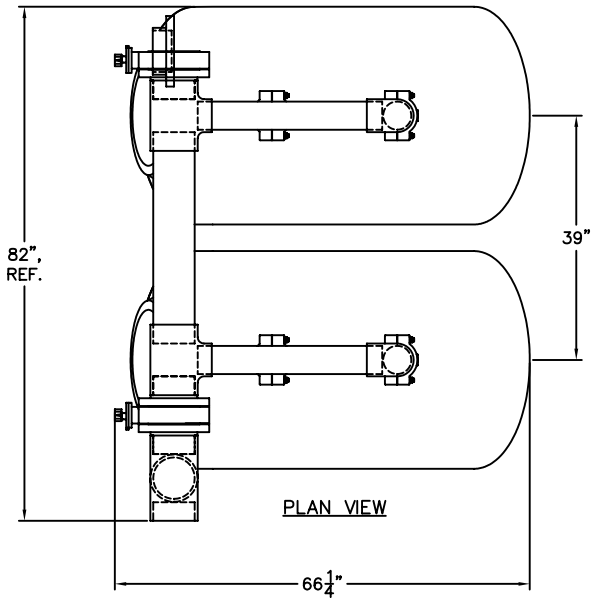

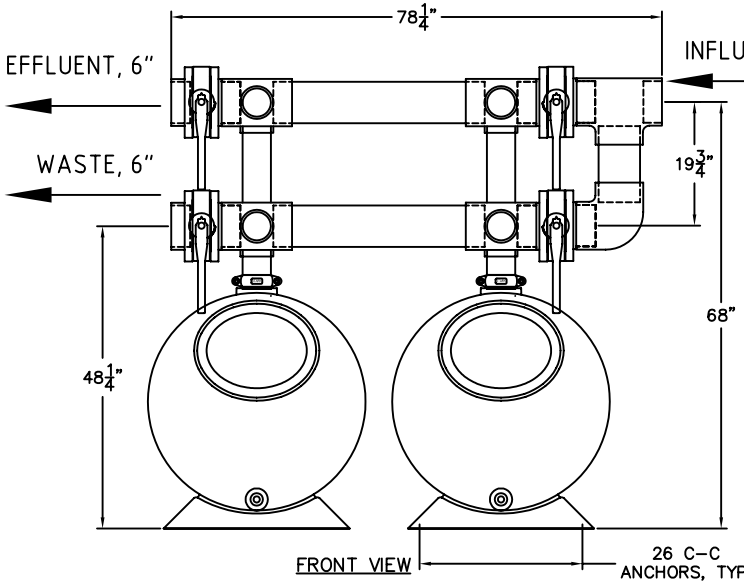

NOTE: DIRECTION OF PIPING MAY BE REVERSED TO ACCOMADATE FACILITY REQUIREMENTS. REFER TO INSTALLATION MANUAL FOR PROPER VALVE HANDLE POSITION FOR EITHER FILTER OR BACKWASH POSITION.

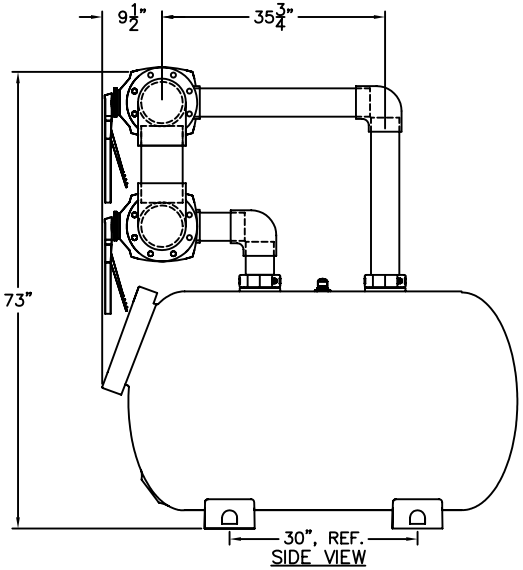

This data represents the latest knowledge available to us at time of presentation. However Paragon Aquatics and others involved in gathering and presenting this drawing assume no liability for its use.

© 2011 Paragon Aquatics

Pentair Water
Commercial Pool and Spa™
Sanford, NC / Moorpark, CA 800-831-7133

Drawn by: JP	Date: 9/23/05	Title: SPECIFICATIONS FOR A (2) TANK THS3461 FILTER SYSTEM "BUTTERFLY VALVE OPTIONAL FACE PIPING KIT" WITH 6" CONNECTIONS	
Approved by: JP	Date: 2/9/11	Drawing Number: SS-155722	Rev Ltr: A / Sheet: 1 of 1

NOTES:

1. TOTAL FILTRATION AREA: 38 SQ. FT.
2. THIS FACE PIPING-KIT IS DESIGNED FOR A MAXIMUM FLOW RATE OF 800 GPM.
3. SYSTEM IS SHOWN WITH OPTIONAL FACE-PIPING KIT (155720).
4. DIMENSIONS ARE IN INCHES. DIMENSIONS ARE APPROXIMATE. DO NOT PRESET ANCHORS.
5. ALL PIPING MUST BE SUPPORTED WITH ADEQUATE BRACING AND HANGERS (BY OTHERS) TO PREVENT DAMAGE FROM WEIGHT AND VIBRATION.
6. SOME CONNECTIONS MUST BE SOLVENT WELDED IN FIELD (BY OTHERS) TO ACCOUNT FOR FIELD TOLERANCES AND FOR SHIPPING PURPOSES. USE APPROPRIATE NSF APPROVED PVC CEMENT AND PRIMER.

		Max Flow Rates			Media Requirements					
Model	Filter Area (ft^2)	Flow Rate @ 10 GPM/ft^2 (GPM)	Flow Rate @ 15 GPM/ft^2 (GPM)	Flow Rate @ 20 GPM/ft^2 (GPM)	Sand Media (ft^2)	Gravel Media (ft^2)	Total Media (ft^2)	Freeboard Height (in.)	Sand Bed Depth (in.)	Gravel Depth (in.)
THS3484	38 (19 per tank)	380	570	760	27.0 (2700 lbs.)	12.0 (1200 lbs.)	39.0 (3900 lbs.)	7 1/2	9	8 5/16

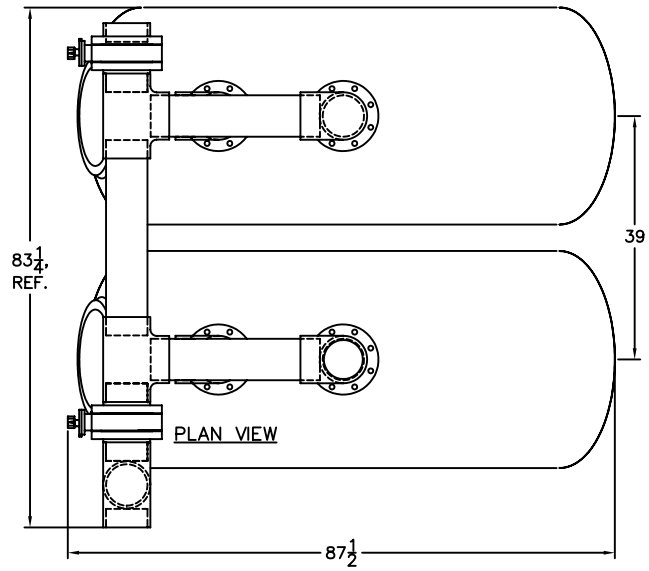

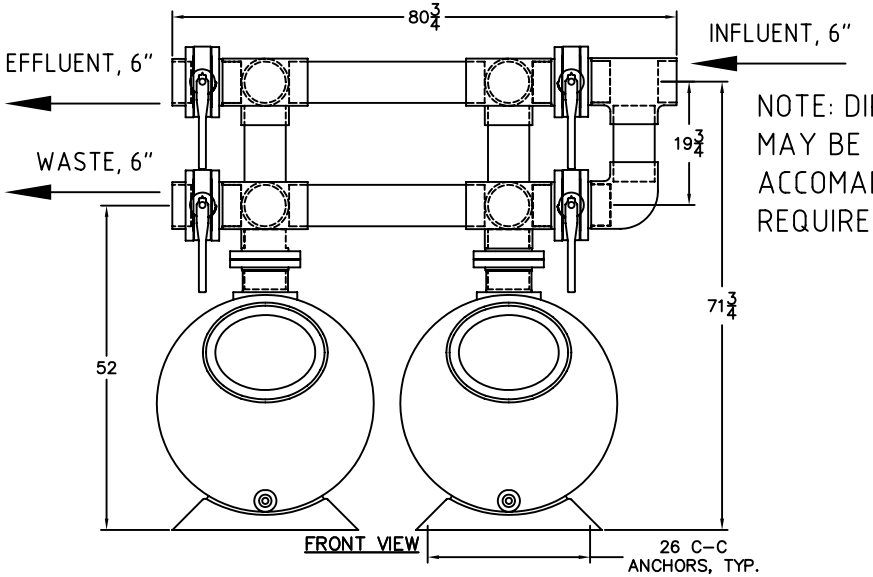

NOTE: DIRECTION OF PIPING MAY BE REVERSED TO ACCOMADATE FACILITY REQUIREMENTS

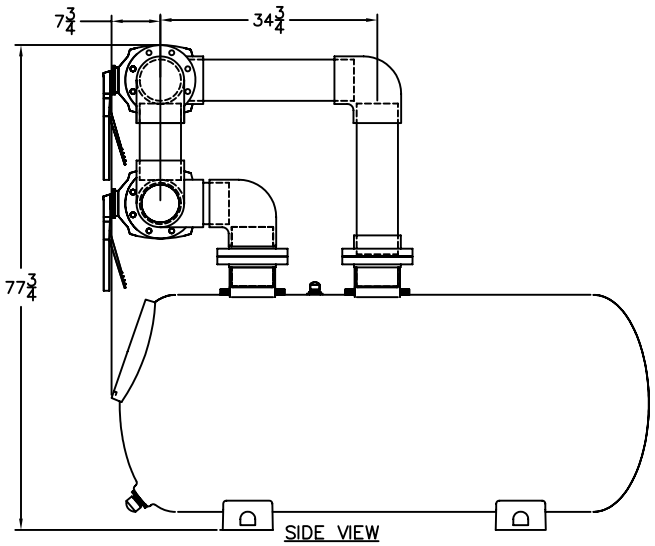

This data represents the latest knowledge available to us at time of presentation. However Paragon Aquatics and others involved in gathering and presenting this drawing assume no liability for its use.

© 2011 Paragon Aquatics

Pentair Water
Commercial Pool and Spa™
Sanford, NC / Moorpark, CA 800-831-7133

Drawn by: JP	Date: 2/21/02	Title: SPECIFICATIONS FOR A 2 (34") TANK SMOOTHIE FILTER SYSTEM "BUTTERFLY VALVE OPTIONAL FACE PIPING KIT" WITH 6" CONNECTIONS	
Approved by: JP	Date: 2/15/11	Drawing Number: SS-THS34-4 (34")	Rev Ltr: C / Sheet: 1 of 1

NOTES:

1. TOTAL FILTRATION AREA: (SEE MATRIX)
2. THIS FACE PIPING-KIT IS DESIGNED FOR A MAXIMUM FLOW RATE OF 800 GPM.
3. SYSTEM IS SHOWN WITH OPTIONAL FACE-PIPING KIT (155720).
4. DIMENSIONS ARE IN INCHES. DIMENSIONS ARE APPROXIMATE. DO NOT PRESET ANCHORS.
5. ALL PIPING MUST BE SUPPORTED WITH ADEQUATE BRACING AND HANGERS (BY OTHERS) TO PREVENT DAMAGE FROM WEIGHT AND VIBRATION.
6. SOME CONNECTIONS MUST BE SOLVENT WELDED IN FIELD (BY OTHERS) TO ACCOUNT FOR FIELD TOLERANCES AND FOR SHIPPING PURPOSES. USE APPROPRIATE NSF APPROVED PVC CEMENT AND PRIMER.

		Max Flow Rates			Media Requirements						Dimensions
Model	Filter Area (ft^2)	Flow Rate @ 10 GPM/ft^2 (GPM)	Flow Rate @ 15 GPM/ft^2 (GPM)	Flow Rate @ 20 GPM/ft^2 (GPM)	Sand Media (ft^2)	Gravel Media (ft^2)	Total Media (ft^2)	Freeboard Height (in.)	Sand Bed Depth (in.)	Gravel Depth (in.)	"A" in.
THS4272	39.4 (19.7 per tank)	394	592	788	42.0 (4200 lbs.)	10.0 (1000 lbs.)	52.0 (5200 lbs.)	9 1/2	15	7 1/2	74
THS4284	46.4 (23.2 per tank)	464	696	N/A	48.0 (4800 lbs)	12.0 (1200 lbs.)	60.0 (6000 lbs.)				86
THS4296	53.4 (26.7 per tank)	534	802	N/A	56.0 (5600 lbs.)	14.0 (1400 lbs.)	70.0 (7000 lbs.)				98

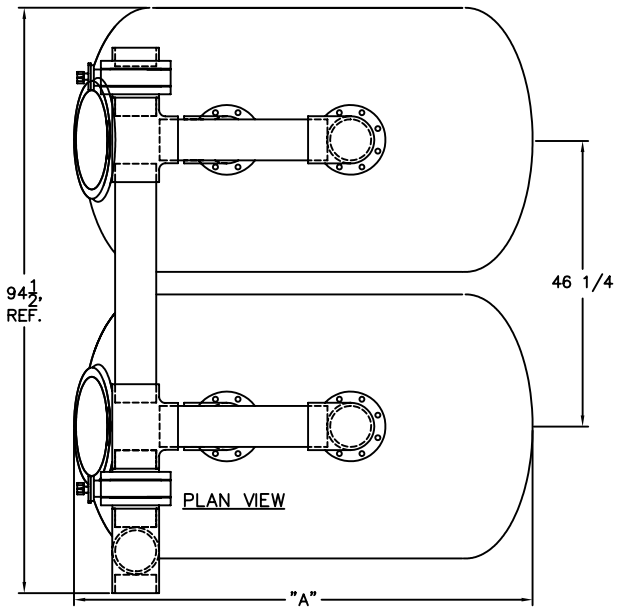

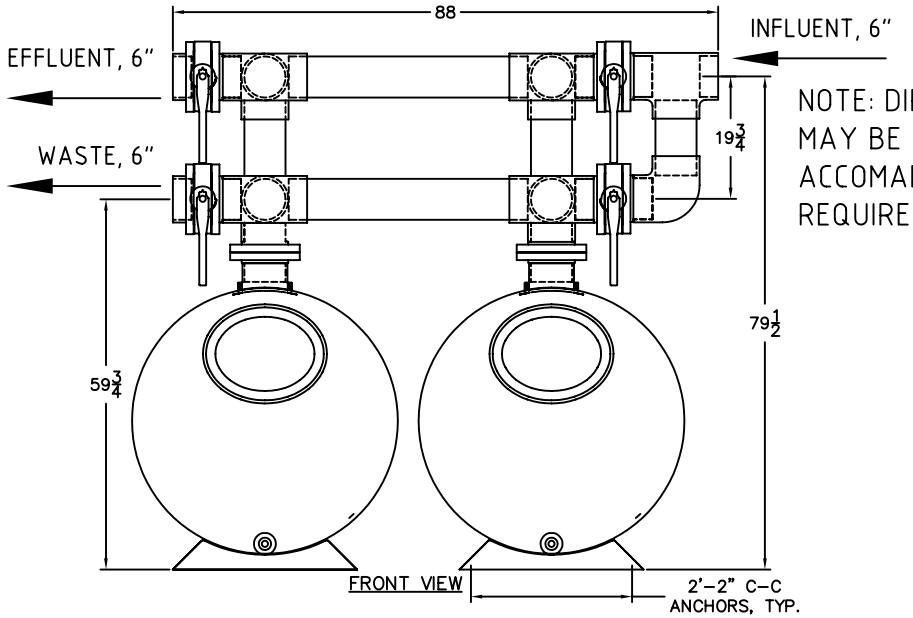

NOTE: DIRECTION OF PIPING MAY BE REVERSED TO ACCOMADATE FACILITY REQUIREMENTS

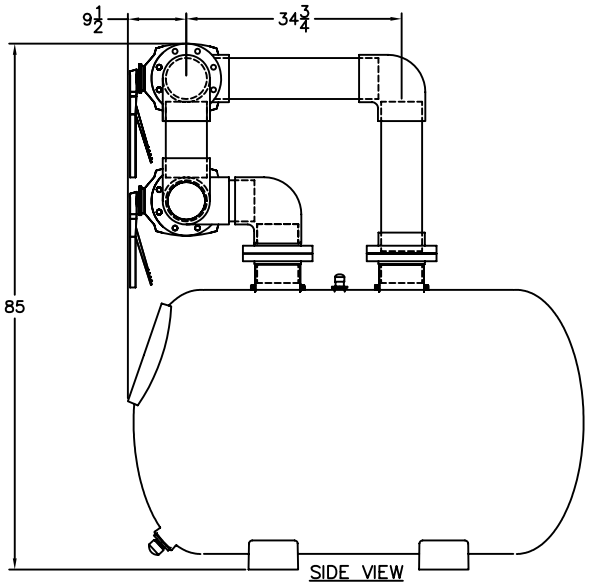

This data represents the latest knowledge available to us at time of presentation. However Paragon Aquatics and others involved in gathering and presenting this drawing assume no liability for its use.

© 2011 Paragon Aquatics

Pentair Water
Commercial Pool and Spa™
Sanford, NC / Moorpark, CA 800-831-7133

Drawn by: JP	Date: 5/4/01	Title: SPECIFICATIONS FOR A 2 (42") TANK SMOOTHIE FILTER SYSTEM "BUTTERFLY VALVE OPTIONAL FACE PIPING KIT" WITH 6" CONNECTIONS	
Approved by: JP	Date: 2/15/11	Drawing Number: SS-THS42-4 (42")	Rev Ltr: C / Sheet: 1 of 1

WATER SOLUTIONS

1620 HAWKINS AVE., SANFORD, NC 27330 • (919) 566-8000
10951 WEST LOS ANGELES AVE., MOORPARK, CA 93021 • (805) 553-5000
WWW.PENTAIRCOMMERCIAL.COM

All Pentair trademarks and logos are owned by Pentair, Inc. Pentair Aquatic Systems™ and THS Series® are trademarks and/or registered trademarks of Pentair Water Pool and Spa, Inc. and/or its affiliated companies in the United States and/ or other countries. Unless expressly noted, names and brands of third parties that may be used in this document are not used to indicate an affiliation or endorsement between the owners of these names and brands and Pentair Water Pool and Spa, Inc. Those names and brands may be the trademarks or registered trademarks of those third parties. Because we are continuously improving our products and services, Pentair reserves the right to change specifications without prior notice. Pentair is an equal opportunity employer.

© 2012 Pentair Aquatic Systems. All rights reserved. This document is subject to change without notice.

P/N 155698 REV. F 7/6/12