PENTAIR

MASTERTEMP® POOL AND SPA HEATER
INSTALLATION AND USER'S GUIDE

⚠WARNING

FOR YOUR SAFETY - READ BEFORE OPERATING

If you do not follow these instructions exactly, a fire or explosion may result, causing property damage, personal injury or loss of life. For additional free copies of this manual; call (800) 831-7133.

FOR YOUR SAFETY - This product must be installed and serviced by authorized personnel, qualified inpool/spa heater installation. Improper installation and/or operation can create carbon monoxide gas and flue gases which can cause serious injury, property damage, or death. For indoor installations, as an additional measure of safety, Pentair Aquatic Systems strongly recommends installation of suitable **Carbon Monoxide detectors** in the vicinity of this appliance and in any adjacent occupied spaces. Improper installation and/or operation will void the warranty.

120/240 VAC NATURAL GAS/LP GAS		
Models	**Natural**	**Propane**
175K BTU/HR	460792	460793
200K BTU/HR **(ASME)**	461000	461001
200K BTU/HR	460730	460731
200K BTU/HR **(HD ASME)**	461032	–
250K BTU/HR	460732	460733
250K BTU/HR **(HD)**	460806	–
250K BTU/HR **(ASME)**	460771	460772
250K BTU/HR **(HD ASME)**	461020	–
300K BTU/HR	460734	460735
400K BTU/HR	460736	460737
400K BTU/HR **(HD)**	460805	–
400K BTU/HR **(ASME)**	460775	460776
400K BTU/HR **(HD ASME)**	461021	–



OWNER: Retain For Future Reference

⚠WARNING Improper installation, adjustment, alteration, service or maintenance can cause propertydamage, personal injury or death. Installation and service must be performed by a qualified installer, service agency or the gas supplier.

FOR YOUR SAFETY

WHAT TO DO IF YOU SMELL GAS

- Do not try to light any appliance.
- Do not touch any electrical switch; do not use any phone in your building.
- Immediately call your gas supplier from a neighbor's phone. Follow the gas supplier's instructions.
- If you cannot reach your gas supplier, call the fire department.

DO NOT store or use gasoline or other flammable vapors and liquids in the vicinity of this or other appliances.

Pentair Water Pool and Spa, Inc.
1620 Hawkins Ave., Sanford, NC 27330 • (800) 831-7133 or (919) 566-8000
10951 W. Los Angeles Ave., Moorpark, CA 93021 • (800) 831-7133 or (805) 553-5000

Customer Service and Tecnincal Support

If you have questions about ordering Pentair Quality Water Systems replacement parts, and pool
products, please call:

Phone: (800) 831-7133

Fax: (800) 284-4151

(8 A.M. to 7:00 PM Eastern Time/Pacific Time)
Web sites: www.pentairpool.com - www.staritepool.com

P/N 472592 Rev. M 1/2015

Contents

Section 1. Heater Identification Information 4

Section 2. Warning and Safety Information 5

Important Notices 5
Warranty Information 5
Code Requirements 6
Consumer Information and Safety Information ..... 6 - 9
General Specifications 9

Section 3. Installation 10

Heater Description 10
Putting the Heater into Service 10
Specifications 11
Plumbing Connections 12
Valves 12
Manual By-Pass 12
Water Connections 13
Below Pool Level Installation 13
Gas Connections 14
Sediment Traps 14
Gas Pipe Sizing 15
Testing Gas Pressure/Gas Pressure Requirements 15-16
Outdoor Installation (US and Canada) / Heater Clearances 16
Outdoor Installation Venting Guidelines 17
Indoor Venting — General Requirements (Category I and Category III requirements) 18
Heater Clearances — General Requirements (Indoor Installation for US or Outdoor Shelter for Canada) 18
Outside Vent Cover Removal 18
Combustion Air Supply /Direct Air Intake Duct with 3-inch PVC Pipe (Indoor Installation) 19-20
Corrosive Vapors and Possible Causes 20
Vent Installation (Indoor Installation for U.S. or Outdoor Shelter for Canada) 21
Vertical Venting - Negative Pressure ..... 21 - 23
Horizontal or Vertical Venting - Positive Pressure 24
Connecting Special Gas Venting ..... 24 - 26
Outdoor Shelter Vent Installation 27
Garage or Utility Room Installation 27
Control Panel Indexing 28
Final Installation Check 28
Electrical Connections 29
Fireman's Switch Connection/Remote Control Connections 30
MasterTemp Heater Wiring Diagram 31
Electrical Schematic Ladder Diagram 32

Section 4. Operation 33

Basic System Operation 33
HSI (Hot-Surface Ignition) Lighting/Operation 33
Operating 34
To Turn Off Gas to Appliance 34
Safety Controls ..... 35 - 37

Section 5. Troubleshooting 38

Initial Troubleshooting and Troubleshooting Chart 38
Heater Will Not Fire Troubleshooting ..... 39 - 42
LED Diagnostics ..... 43 - 44
Burner / Heat Exchanger Troubleshooting 45

Section 6. Maintenance 46

Care and Maintenance 46
Pressure Relief Valve 46
After Start-Up 47
Spring, Fall and Winter Operation 47
Maintaining Pool Temperature 48
Energy Saving Tips 49
Chemical Balance ..... 48 - 49
Replacement Parts ..... 50 - 54

Section 1: Heater Identification Information

To identify the heater, see rating plate on the inner front panel of the heater. There are two designators for each heater, one is the Model Number and the other is the Heater Identification Number (HIN).

a. Heater Identification Number (HIN)

The following *example* simplifies the identification system:

1) **MT** : MasterTemp
2) **Model Size** : (**175, 200, 250, 300** or **400**) : Input rating (Btu/hr) X 1000
3) **Fuel Type** : (**LP** = Propane gas or **NA** = Natural gas)
4) **Construction** : (**STD** = Standard Model)
(**HD** = Heavy Duty Model)
(**ASME** = ASME Certified Model)
(**HD ASME** = Heavy Duty ASME Model)

HEATER IDENTIFICATION INFORMATION — (HIN)

H. I. N.

HEATER IDENTIFICATION NUMBER

ID DESIGNATOR FOR PENTAIR AQUATIC SYSTEMS MASTERTEMP® HEATERS

Example:

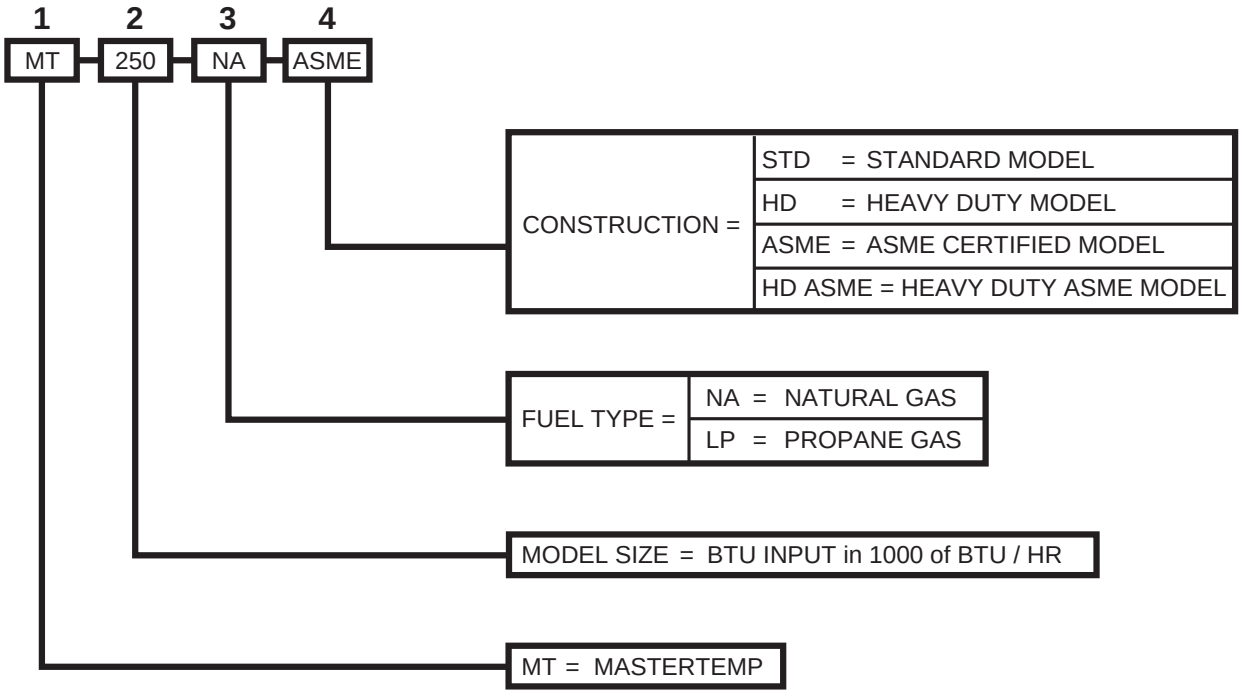

Section 2: Warning and Safety Instructions

IMPORTANT SAFETY INSTRUCTIONS
READ AND FOLLOW ALL INSTRUCTIONS
SAVE THESE INSTRUCTIONS

MASTERTEMP®
Pool and Spa Heater

Congratulations on your purchase of the MasterTemp Pool and Spa Heater. Proper installation and service of your new heating system and correct chemical maintenance of the water will ensure years of enjoyment. The MasterTemp heater is a compact, lightweight, efficient, induced-draft, gas fired high performance pool and spa heater that can be directly connected to schedule 40 PVC pipe. The MasterTemp heater also comes equipped with the Pentair multifunction temperature controller which shows, at a glance, the proper functioning of the heater. All MasterTemp heaters are designed with a direct ignition device, HSI (hot-surface ignition), which eliminates the need for a standing pilot. The MasterTemp heater requires an external power source (120/240 VAC 60 Hz) to operate.

SPECIAL INSTRUCTIONS TO OWNER: Retain this manual for future reference. This instruction manual provides operating instructions, installation and service information for the MasterTemp high performance heater. The information in this manual applies to all MasterTemp heater models. **READ AND REVIEW THIS MANUAL COMPLETELY,** it is very important that the owner/installer read and understand the section covering installation instructions, and recognize the local and state codes before installing the MasterTemp heater. Its use will reduce service calls and chance of injury and will lengthen product life. History and experience has shown that most heater damage is caused by improper installation practices.

IMPORTANT NOTICES

For the installer and operator of the MasterTemp heater: The manufacturer's warranty may be void if, for any reason, the heater is improperly installed and/or operated. Be sure to follow the instructions set forth in this manual. If you need any more information, or if you have any questions regarding to this pool heater, please contact Pentair Aquatic Systems at (800) 831-7133.

WARRANTY INFORMATION

The MasterTemp pool and spa heater is sold with a limited factory warranty. ***Specific details are described on the warranty registration card which is included with the product.*** Return the warranty registration card after filling in the serial number from the rating plate inside the heater.

Pentair Aquatic Systems high standards of excellence include a policy of continuous product improvement resulting in your state-of-the-art heater. We reserve the right to make improvements which change the specifications of the heater without incurring an obligation to update the current heater equipment.

These heaters are designed for the heating of chlorine, bromine or salt system swimming pools and spas or in non-stationary installations, and should never be employed for use as space heating boilers or general purpose water heaters. The manufacturer's warranty may be void if, for any reason, the heater is improperly installed and/or operated. Be sure to follow the instructions set forth in this manual.

⚠CAUTION

OPERATING THIS HEATER CONTINUOUSLY AT WATER TEMPERATURE BELOW 68° F. WILL CAUSE HARMFUL CONDENSATION AND WILL DAMAGE THE HEATER AND VOID THE WARRANTY. Do not use the heater to protect pools or spas from freezing if the final maintenance temperature desired is below 68° F., as this will cause condensation related problems.

CODE REQUIREMENTS

Installation must be in accordance with all local codes and/or the latest edition of the National Fuel Gas Code, ANSI Z223.1 and the latest edition of the National Electrical Code, NFPA 70 (US).

Installation in Canada must be in accordance with the latest CAN/CGA-B149.1 or .2 and CSA C22.1 Canadian Electric Code, part 1.

The heater, when installed, must be electrically grounded and bonded in accordance with local codes, or, in absence of local codes, with the National Electrical Code, ANSI/NFPA70 (US) or in Canada in accordance with the Canadian Electric Code, part 1.as applicable.





⚠DANGER

CARBON MONOXIDE GAS IS DEADLY – Exhaust from this pool heater contains toxic levels of carbon monoxide, a dangerous, poisonous gas you cannot see or smell.

CONSUMER INFORMATION AND SAFETY

⚠WARNING

The U.S. Consumer Product Safety Commission warns that elevated water temperature can be hazardous. See below for water temperature guidelines before setting temperature.

1. Spa or hot tub water temperatures should never exceed 104° F (40° C). A temperature of 100° F (38° C) is considered safe for a healthy adult. Special caution is suggested for young children.
2. Drinking of alcoholic beverages before or during spa or hot tub use can cause drowsiness which could lead to unconsciousness and subsequently result in drowning.
3. Pregnant women beware! Soaking in water above 102° F (39° C) can cause fetal damage during the first three months of pregnancy (resulting in the birth of a brain-damaged or deformed child). Pregnant women should stick to the 100° F (38° C) maximum rule.
4. Before entering the spa or hot tub, the user should check the water temperature with an accurate thermometer. Spa or hot tub thermostats may err in regulating water temperatures by as much as 4° F (2.2° C).
5. Persons with a medical history of heart disease, circulatory problems, diabetes or blood pressure problems should obtain their physician's advice before using spas or hot tubs.
6. Persons taking medication which induce drowsiness, such as tranquilizers, antihistamines or anticoagulants should not use spas or hot tubs.

⚠WARNING

Should overheating occur or the gas supply fail to shut off, turn off the manual gas control valve to the heater. Do not use this heater if any part has been under water. Immediately call a qualified service technician to inspect the heater and to replace any part of control system and gas control which has been under water.

SAFETY INFORMATION

The MasterTemp® pool heaters are designed and manufactured to provide many years of safe and reliable service when installed, operated and maintained according to the information in this manual. Throughout the manual, safety warnings and cautions are identified by the " ⚠ " symbol. Be sure to read and comply with all of the warnings and cautions.

⚠ DANGER — CARBON MONOXIDE GAS IS DEADLY

READ OWNERS MANUAL COMPLETELY BEFORE OPERATING

THIS PRODUCT MUST BE INSTALLED AND SERVICED BY A PROFESSIONAL SERVICE TECHNICIAN, QUALIFIED IN POOL HEATER INSTALLATION. Some jurisdictions require that installers be licensed. Check with your local building authority about contractor licensing requirements. Improper installation and/or operation could create carbon monoxide gas and flue gases which could cause serious injury or death. Improper installation and/or operation will void the warranty.

Exhaust from this pool heater contains toxic levels of carbon monoxide, a dangerous, poisonous gas you cannot see or smell. Symptoms of carbon monoxide exposure or poisoning include dizziness, headache, nausea, weakness, sleepiness, muscular twitching, vomiting and inability to think clearly. IF YOU EXPERIENCE ANY OF THE ABOVE SYMPTOMS, IMMEDIATELY TURN OFF THE POOL HEATER, LEAVE THE VICINITY OF THE POOL OR SPA AND GET INTO FRESH AIR IMMEDIATELY. THE POOL HEATER MUST BE THOROUGHLY TESTED BY A GAS PROFESSIONAL BEFORE RESUMING OPERATION.

EXCESSIVE CARBON MONOXIDE EXPOSURE CAN CAUSE BRAIN DAMAGE OR DEATH.

NEVER use this pool heater indoors without specified ventilation system (and properly installed vent pipe).

NEVER use this pool heater in the home or in partly enclosed areas (such as garages), unless the specified ventilation system is used. If used outdoors, install far from open windows, doors, vents and other openings.

Pentair strongly recommends that all vents, pipes and exhaust systems be initially and periodically tested for proper operation. This testing can be accomplished by using a hand-held carbon monoxide meter and/or by consulting with a gas professional.

Pool heaters must be used in conjunction with carbon monoxide detectors installed near the pool heater. The carbon monoxide detectors must be periodically inspected for proper operation so as to insure continued safety. Broken or malfunctioning carbon monoxide detectors must be replaced immediately.

⚠ WARNING — FOR YOUR SAFETY

This product must be installed and serviced by a professional service technician, qualified in pool heater installation. Some jurisdictions require that installers be licensed. Check with your local building authority about contractor licensing requirements. Improper installation and/or operation could create carbon monoxide gas and flue gases which could cause serious injury or death. Improper installation and/or operation will void the warranty.

⚠ WARNING — This heater is equipped with an unconventional gas control valve that is factory set with a manifold pressure of -.2 inches wc.

Improper installation, adjustment, alteration, service or maintenance can cause property damage, personal injury or loss of life. Installation or service must be performed by a qualified installer, service agency or the gas supplier. If this control is replaced, it must be replaced with an identical control.

Do not attempt to adjust the gas flow by adjusting the regulator setting.

SAFETY INFORMATION, (cont'd.)

WARNING — Risk of fire or explosion from incorrect fuel use or faulty fuel conversion. Do not try to run a heater set up for natural gas on propane gas or vice versa. Only qualified service technicians should attempt to convert heater from one fuel to the other. Do not attempt to alter the rated input or type of gas by changing the orifice. If it is necessary to convert to a different type of gas, consult your Pentair dealer. Serious malfunction of the burner can occur which may result in loss of life. Any additions, changes, or conversions required in order for the appliance to satisfactorily meet the application needs must be made by a Pentair dealer or other qualified agency using factory specified and approved parts. The heater is available for use with natural gas or LP (propane) gas only. It is not designed to operate with any other fuels. Refer to the nameplate for the type of gas the heater is equipped to use.

- Use heater only with the fuel for which it is designed.
- If a fuel conversion is necessary, refer this work to a qualified service technician or gas supplier before putting the heater into operation.

WARNING — Risk of fire or explosion from flammable vapors. Do not store gasoline, cleaning fluids, varnishes, paints, or other volatile flammable liquids near heater or in the same room with heater.

WARNING — Risk of explosion if unit is installed near propane gas storage. Propane (LP) gas is heavier than air. Consult local codes and fire protection authorities about specific installation requirements and restrictions. Locate the heater away from propane gas storage and filling equipment as specified by the Standard for the Storage and Handling of Liquefied Petroleum Gases, CAN/CSA B149.2 (latest edition) or ANSI/NFPA 58 (latest edition).

WARNING — Risk of fire, carbon monoxide poisoning, or asphyxiation if exhaust venting system leaks. Only qualified service technicians should attempt to service the heater, as leakage of exhaust products or flammable gas may result from incorrect servicing.

WARNING — Risk of asphyxiation if exhaust is not correctly vented. Follow venting instructions exactly when installing heater. Do not use a drafthood with this heater, as the exhaust is under pressure from the burner blower and a draft hood will allow exhaust fumes to blow into the room housing the heater. The heater is supplied with an integral venting system for outdoor installation. A vent conversion kit (See Page 24 for Part Numbers for Conversion Kits) is available for installations in enclosures (Canada) or indoors (U.S.). Use the specified venting, and only the specified venting, when heater is installed in an enclosure or indoors. In Canada, this pool heater can only be installed outdoors or in an enclosure that is not normally occupied and has no openings directly into occupied areas. See Page 19 for enclosure venting requirements.

CAUTION — Label all wires prior to disconnection when servicing controls. Wiring errors can cause improper and dangerous operation. Wiring errors can also destroy the control board.

- Connect heater to **120** or **240** Volt, 60 Hz., Single Phase power only.
- Verify proper operation after servicing.
- Do not allow children to play on or around heater or associated equipment.
- Never allow children to use the pool or spa without adult supervision.
- Read and follow other safety information contained in this manual prior to operating this pool heater.

CONSUMER INFORMATION AND SAFETY

⚠ WARNING

The U.S. Consumer Product Safety Commission warns that carbon monoxide is an "invisible killer". Carbon monoxide is a colorless and odorless gas.

1. Carbon monoxide is produced by burning fuel, including natural gas and propane.
2. Proper installation, operation and maintenance of fuel-burning appliances in the home is the most important factor in reducing carbon monoxide poisoning.
3. Be sure that fuel burning appliances such as heaters are installed by professionals according to manufacturer's instructions and codes.
4. Always follow the manufacturer's directions for safe operation.
5. Have the heating system (including vents) inspected and serviced annually by a trained service technician.
6. Examine vents regularly for improper connections, visible cracks, rust or stains.
7. Install battery-operated carbon monoxide alarms. The alarms should be certified to the requirements of the most recent UL, IAS, CSA and IAPMO standard for carbon monoxide alarms. Test carbon monoxide alarms regularly and replace dead batteries.

GENERAL SPECIFICATIONS

NOTICE:

- Combustion air contaminated by corrosive chemical fumes can damage the heater and will void the warranty.
- The Combination Gas Control Valve on this heater differs from most appliance gas controls. If it must be replaced, for safety reasons replace it only with an identical gas control.
- The access door panels must be in place to provide proper ventilation. Do not operate the heater for more than five (5) minutes with the access door panels removed.
- This heater is design certified by CSA International as complying with the Standard for Gas Fired Pool Heaters, ANSI Z21.56/CSA 4.7, and is intended for use in heating fresh water swimming pools or spas.
- The heater is designed for the heating of chlorine, bromine or salt system swimming pools and spas. It should **NOT** be used as a space heating boiler, or general purpose water heater.
- The heater is design certified by CSA International for installation on combustible flooring. Specified minimum clearances must be maintained to combustible surfaces (see “Heater Clearances”, page 18).
- The heater should be located in an area where leakage of the heater or connections will not result in damage to the area adjacent to the heater or to the structure. When such locations cannot be avoided, it is recommended that a suitable drain pan, adequately drained, be installed under the heater. The pan must not restrict air flow.
- The heater may not be installed within 5 ft. (1.5M) of the inside surface of a pool or spa unless it is separated by a solid fence, wall or other permanent barrier.

Section 3: Installation Instructions

HEATER DESCRIPTION

Figure 1 is a diagram of the heater showing how it operates. Precisely matched orifice plates meter the air and gas into the mixer. The blower draws the air and gas through the mixer and forces it into the burner's flame holder. A sealed heat exchanger surrounds the flame holder, discharging exhaust gases out the flue.

Two inch PVC water piping connects directly to the manifold/header on the heat exchanger using 2" PVC slip unions provided with the heater. The outer manifold remains cool; no heat sinks are required. A thermal regulator and an internal bypass regulate the water flow through the heat exchanger to maintain the correct outlet temperature. The heater operator control panel board assembly is located on top of the heater.

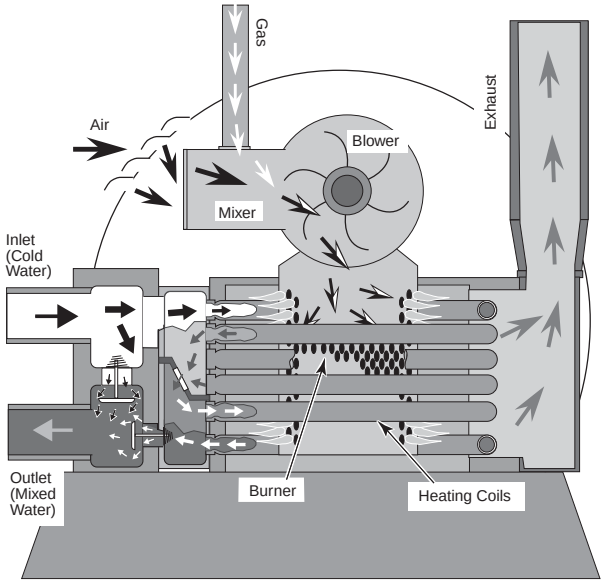

Figure 1.

SEQUENCE OF OPERATION

An electronic temperature sensing **thermistor** in the manifold adapter inlet controls the heater operation. When the inlet water temperature drops below the temperature set on the **operating control**, the **burner controller** supplies power to the combustion **air blower** through a series of **safety interlocks**. The interlocks consist of:

- the **pressure switch** (**PS**), which senses that the pump is running,
- the **high limit switch** (**HLS**), which opens if the heat exchanger outlet temperature goes above 135° F (57° C), and
- the **air flow switch** (**AFS**), which senses the pressure drop across the air metering orifice,
- the **automatic gas shut-off** (**AGS**) switch, which opens if the heat exchanger outlet temperature goes above 140° F (60° C).
- the **stack flue sensor** (**SFS**), which shuts down the heater if the flue gas temperature reaches 480° F (249° C).

The air flow switch (AFS) senses the pressure drop across the air metering orifice. As soon as there is sufficient air flow, the AFS closes, closing the circuit to the **hot surface igniter** (**HSI**), which ignites the fuel mixture. On a call for heat, the blower and HSI are energized. In about 20 seconds, the gas valve opens and ignition occurs. The HSI then switches to a sensing mode and monitors the flame.

The heater is equipped with a digital operating control that enables the user to pre-set the desired pool and spa water temperatures. The control enables the user to select between pool and spa heating, and features a digital display that indicates the water temperature.

PUTTING THE HEATER INTO SERVICE

If the heater is installed below the level of the pool, or more than two feet above pool level, the pressure switch setting should be adjusted. See WATER PRESSURE SWITCH, in the SAFETY CONTROLS Section.

Before putting the heater into service for the first time, follow the instructions under "BEFORE START-UP" (page 33) in the front of this manual. Check for proper operation of the heater by following the steps under "OPERATION INSTRUCTIONS."

Damage to equipment caused by improper installation or repair will void the warranty.

SPECIFICATIONS

These installation instructions are designed for use by qualified personnel only, trained especially for installation of this type of heating equipment and related components. Some states require installation and repair by licensed personnel. If this applies in your state, be sure your contractor bears the appropriate license. See Figure 2 for Outdoor and Indoor Installations.

DIMENSIONS IN INCHES

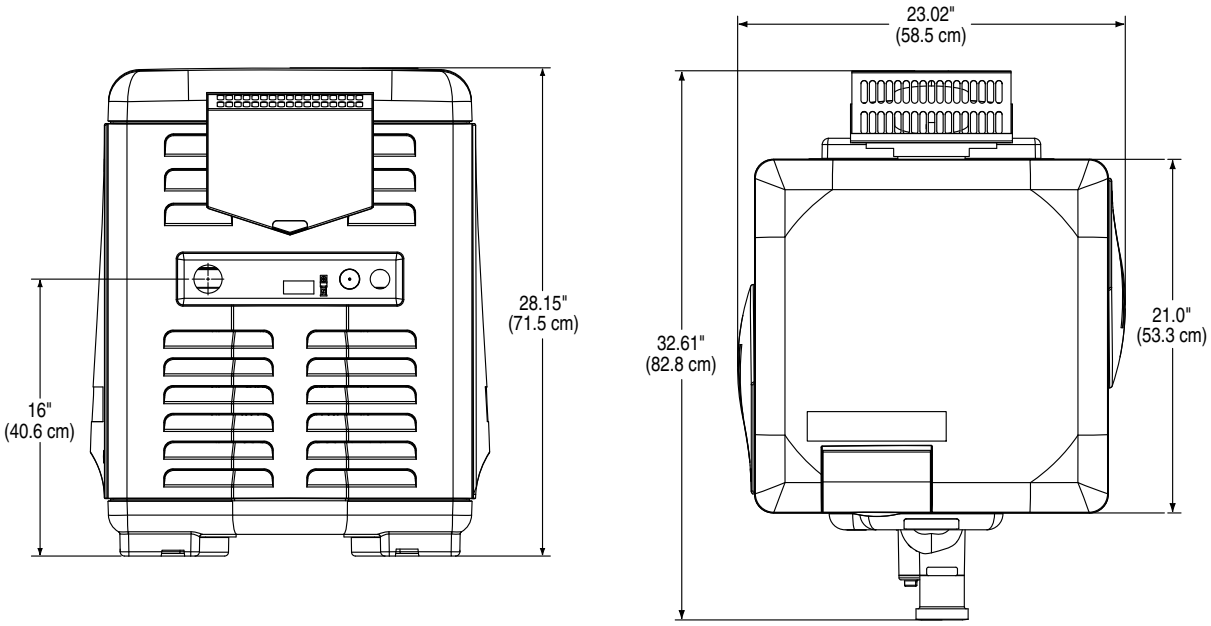

FRONT **TOP**

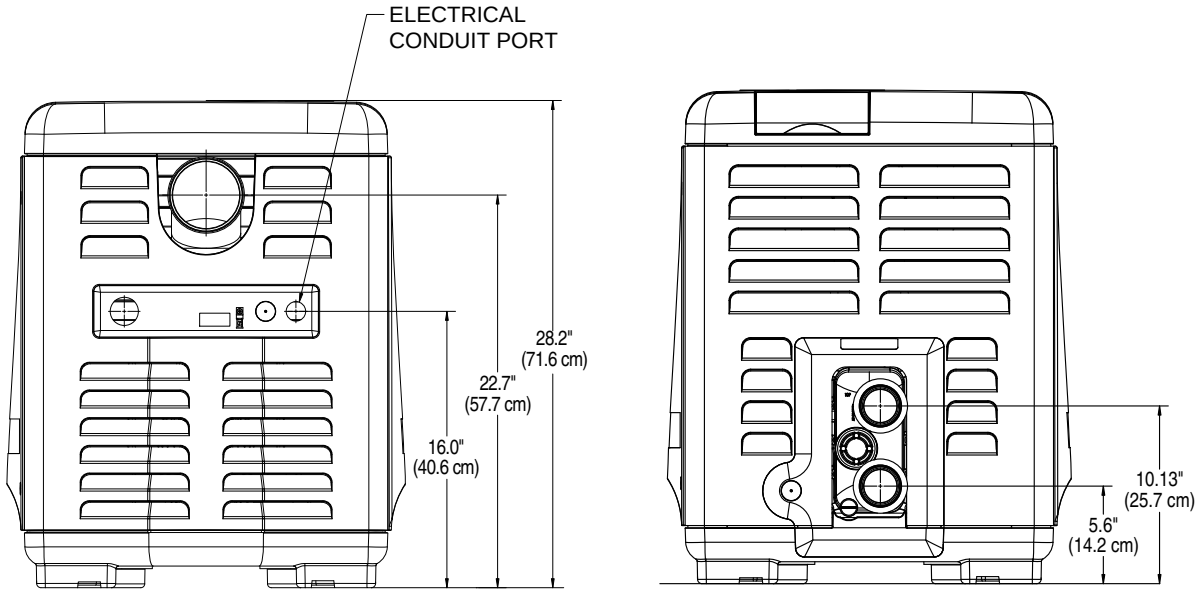

EXHAUST SIDE **PLUMBING SIDE**

Figure 2.

PLUMBING CONNECTIONS

The MasterTemp heater has the unique capability of direct schedule 40 PVC plumbing connections. A set of bulkhead fittings is included with the MasterTemp heater to insure conformity with Pentair's recommended PVC plumbing procedure. Other plumbing connections can be used. See Figure 3 for plumbing connections.

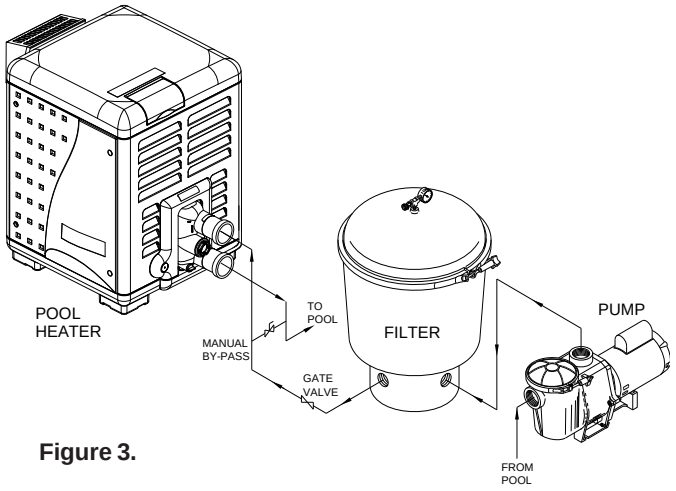

Figure 3.

⚠CAUTION

Before operating the heater on a new installation, turn on the circulation pump and bleed all the air from the filter using the air relief valve on top of the filter. Water should flow freely through the heater. Do not operate the heater unless water in the pool/spa is at the proper level. If a manual by-pass is installed, temporarily close it to insure that all air is purged from the heater.

WATER CONNECTIONS

The heater requires proper water flow and pressure for its operation. See Figure 5 for the recommended installation. The filter pump discharges to the filter, the filter discharges to the heater, and the heater discharges directly to the pool or spa.

A manual bypass valve should be installed across the heater when the pump flow exceeds 120 GPM (454 LPM). See "WATER FLOW RATE" on page 13- Table 1 for setting of the manual by-pass valve.

Make sure that the outlet plumbing from the heater contains no shut-off valves or other flow restrictions that could prevent flow through the heater (except for pool installations as noted below, or winterizing valves where needed). To switch flow between the pool and spa, use a diverter valve. Do not use any valve that can shut off the flow.

Install the chemical feeder downstream of the heater. Install a chemical resistant one-way check valve between the heater and the chemical feeder to prevent back-siphoning through the heater when the pump is off.

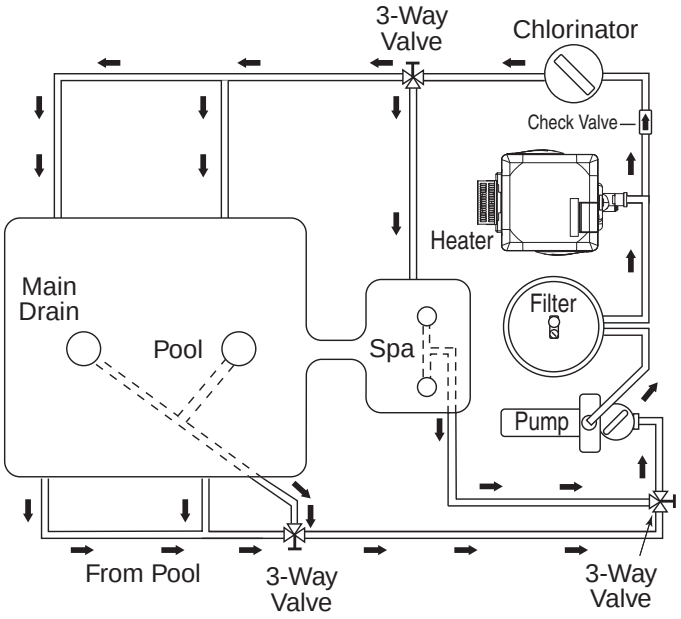

Figure 5.

NOTICE: If the heater is plumbed in backwards, it will cycle continuously. Make sure piping from filter is not reversed when installing heater.

Connect the heater directly to 2" PVC pipe, using the integral unions provided. Heat sinks are not required. The low thermal mass of the heater will prevent overheating of the piping connected to the pump even if the heater shuts down unexpectedly.

Occasionally a two-speed pump will not develop enough pressure on the low speed to operate the heater. In this case, run the pump at high speed only to operate the heater. If this does not solve the problem, do not try to run the heater. Instead, correct the installation.

Do not operate the heater while an automatic pool cleaner is also operating. If the circulation pump suction is plugged (for example by leaves), there may not be adequate flow to the heater. Do not rely on the pressure switch in this case.

VALVES

When any equipment is located below the surface of the pool or spa, valves should be placed in the circulation piping system to isolate the equipment from the pool or spa. Check valves are recommended to prevent back-siphoning. Back-siphoning is most likely to occur when the pump stops, creating a pressure-suction differential. Do **NOT** sanitize the pool by putting chlorine tablets or sticks into the skimmer(s). When the pump is off, this will cause a high concentration of chlorine to enter the heater, which could cause corrosion damage to the heat exchanger.

⚠CAUTION

Exercise care when installing chemical feeders so as to not allow back siphoning of chemical into the heater, filters or pump. When chemical feeders are installed in the circulation of the piping system, make sure the feeder outlet line is down stream of the heater, and is equipped with a positive seal noncorrosive "Check Valve", (P/N R172288), between the feeder and heater.

MANUAL BY-PASS

Where the water flow rate exceeds the maximum 120 GPM, a manual bypass should be installed and adjusted. After installing the valve, adjust the valve to bring the flow rate within the acceptable range. Then remove the valve handle or lock it in place to avoid tampering. See Figure 4.

Table 1.

Model	Min. (GPM) (LPM)	Max. (GPM) (LPM) *
175	20 (76)	120 (454)
200	20 (76)	120 (454)
250	25 (95)	120 (454)
300	30 (114)	120 (454)
400	40 (152)	120 (454)

*** Do not exceed the maximum recommended flow rate for the connecting piping.**

*** Pumps 2 HP or larger can produce water pressure flow in excess of 120 GPM. For these pumps, a BY-PASS VALVE is recommended.**

Figure 4.

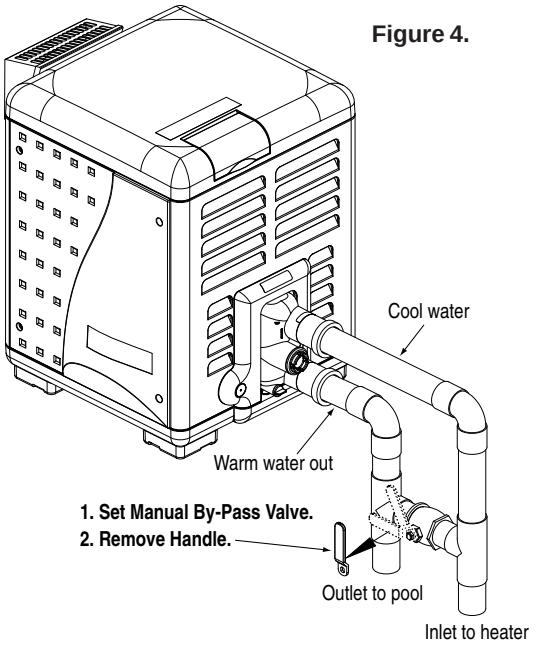

See page 46 for Pressure Relief Valve Installations.

BELOW POOL LEVEL INSTALLATION

If the heater is below water level, the pressure switch must be adjusted. This adjustment must be done by a qualified service technician. See following **CAUTION** before installation.

⚠CAUTION

BELOW OR ABOVE POOL INSTALLATION

The water pressure switch is set in the factory at 3.00 PSI (± 0.75 PSI). This setting is for a heater installed at pool level. If the heater is to be installed more than 1' above or below, the water pressure switch must be adjusted by a qualified service technician. **See page 35, Figure 29.**

FLOW SWITCH

If the heater is installed more than 5' above the pool or more than 4' below the pool level, you will be beyond the limits of the pressure switch and a flow switch must be installed. Locate and install the flow switch externally on the outlet piping from the heater, as close as possible to the heater. Connect the flow switch wires in place of the water pressure switch wires.

GAS CONNECTIONS

GAS LINE INSTALLATIONS

Before installing the gas line, be sure to check which gas the heater has been designed to burn. This is important because different types of gas require different gas pipe sizes. The rating plate on the heater will indicate which gas the heater is designed to burn. The Table 2, shown on page 15, show which size pipe is required for the distance from the gas meter to the heater. The table is for natural gas at a specific gravity of .65 and propane at a specific gravity of 1.55.

When sizing gas lines, calculate three (3) additional feet of straight pipe for every elbow used. When installing the gas line, avoid getting dirt, grease or other foreign material in the pipe as this may cause damage to the gas valve, which may result in heater failure.

The gas meter should be checked to make sure that it will supply enough gas to the heater and any other appliances that may be used on the same meter. The gas line from the meter will usually be of a larger size than the gas valve supplied with the heater. Therefore a reduction of the connecting gas pipe will be necessary. Make this reduction as close to the heater as possible.

The heater requires a gas supply of not less than 4" (10.2 cm) wc and not more than 14" (35.6 cm) wc. Gas supply pressures outside of this range may result in improper burner operation. A minimum flowing or dynamic inlet pressure (while the heater is running) of 4" (10.2cm) wc is required to maintain input rating with no more than a 2" pressure drop between static and dynamic. The gas supply must be installed in accordance with the *National Fuel Gas Code*, *ANSIZ223.1*, or standard *CSA B149.1*, *Natural Gas and Propane Installation Codes*, as applicable and all applicable local codes. Install a manual shut-off valve and a sediment trap and union located outside the heater panels, see Figure 6. Do not use a restrictive gas cock. The following minimum gas pipe sizes are recommended for natural gas supply piping, see Table 2 on page 15. For low pressure LP gas, pipe size may be reduced by 1/4", with a minimum pipe size of 1/2". Check for compliance with local codes.

The heater and any other gas appliances must be disconnected from the gas supply piping system during any pressure testing on that system, (greater than ½ PSI). The heater and its gas connection must be leak tested before placing the heater in operation. **Do not use flame to test the gas line.** Use soapy water or another nonflammable method.

NOTE

A manual main shut-off valve must be installed externally to the heater.

⚠WARNING

DO NOT INSTALL THE GAS LINE UNION INSIDE THE HEATER CABINET. THIS WILL VOID YOUR WARRANTY.

SEDIMENT TRAPS

Install a sediment trap and union located outside the heater panels in accordance with National code requirements. Do not use a restrictive gas cock. The sediment trap shall be either a tee fitting with a capped nipple in the bottom outlet which can be removed for cleaning, as illustrated in Figure 6, or an other device recognized as an effective sediment trap. All gas piping should be tested after installation in accordance with local codes.

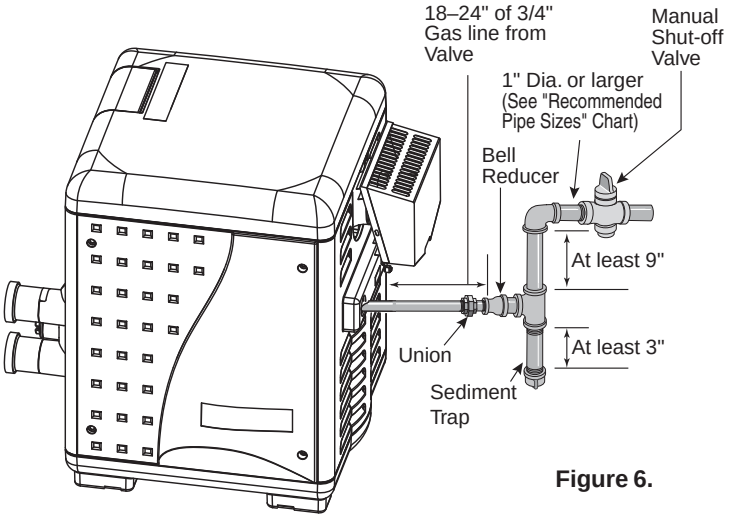

Figure 6.

GAS PIPE SIZING

STAGE TWO "LOW PRESSURE" GAS PIPE SIZING

Table 2.

PIPE SIZING FOR GAS LINE CONNECTIONS														
MAXIMUM EQUIVALENT PIPE LENGTH (Ft.)														
Natural Gas at 1000 B.T.U. per Cubic Foot														
Propane Gas at 2500 B.T.U. per Cubic Foot														
	1/2"		3/4"		1"		1-1/4"		1-1/2"		2"		2-1/2"	
MODEL	NAT	PRO	NAT	PRO	NAT	PRO	NAT	PRO	NAT	PRO	NAT	PRO	NAT	PRO
175	-	20'	30'	80'	125'	250'	450'	600'	-	-	-	-	-	-
200	-	20'	30'	80'	125'	250'	450'	600'	-	-	-	-	-	-
250	-	10'	20'	50'	70'	150'	250'	500'	600'	-	-	-	-	-
300	-	-	10'	30'	50'	100'	200'	350'	400'	600'	-	-	-	-
400	-	-	-	10'	20'	60'	100'	150'	200'	450'	400'	-	-	-

TESTING GAS PRESSURE

Before operating the heater, the heater and its gas connections must be leak tested. **Do NOT use an open flame to test for leaks.** Test all gas connections for leaks with soapy water or another non-flammable method (see page 14).

The heater and its individual shut-off valve must be disconnected from the gas supply piping system during any pressure testing of that system at test pressures in excess of 1/2 psig (3.5 kPa).

The heater must be isolated from the gas supply system by closing its individual manual shut-off valve during any pressure testing of the gas supply at test pressures equal to or less than 1/2 psig (3.5 kPa).

CHECKING THE GAS PRESSURE THROUGH THE COMBINATION GAS CONTROL VALVE

⚠WARNING

Risk of fire and explosion. Improper installation, incorrect adjustment, alteration, service, or maintenance of the Combination Gas Control Valve can lead to fire or explosion, causing loss of life, personal injury, and/or property damage. If it is necessary to adjust the gas valve, this must be done by only by a qualified service agency. **These instructions are for the use of qualified service technicians only!**

This appliance is equipped with an unconventional gas control valve that is factory set with a manifold pressure of –.2" (–0.5cm) wc. Installation or service must be performed by a qualified installer, service agency, or the gas supplier. If this control valve is replaced, it must be replaced with an identical control.

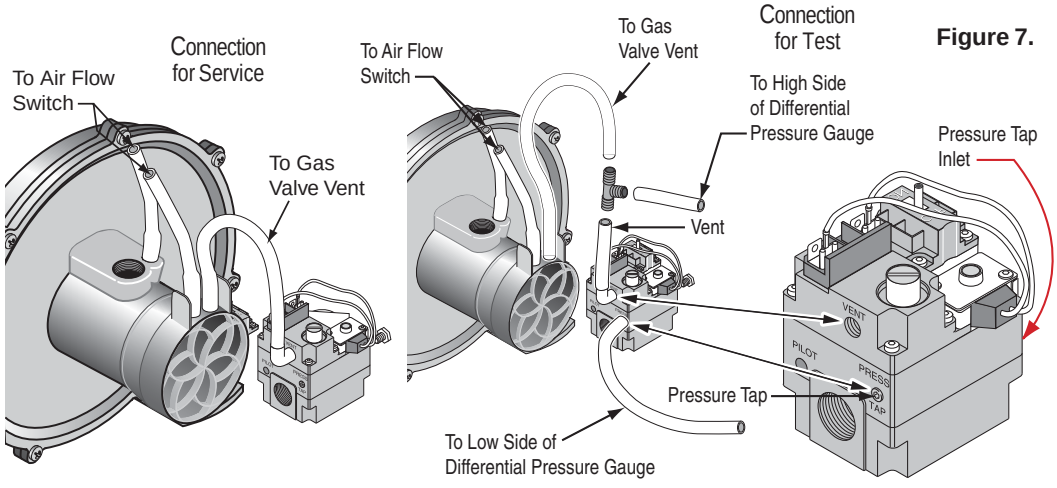

Figure 7.

The combination gas valve incorporates dual shut-off valves and a negative-pressure regulator. For proper operation, the regulated pressure at the outlet manifold of the valve must be –0.2" (–0.5cm) wc below the reference pressure at the blower mixer inlet, and the gas valve 'VENT' tap must be connected to the end cap air orifice as shown in Figure 7.

Do not attempt to adjust the gas input by adjusting the regulator setting. The correct gas regulator setting is required to maintain proper combustion and must NOT be altered.

⚠CAUTION

The use of Flexible Connectors (FLEX) is NOT recommended unless they are properly sized according to the supplier recommendations for the heater rating.

GAS PRESSURE REQUIREMENTS

Gas Pressure	Model	Natural	Propane
		Inches W.C.	
Maximum Inlet	MT	14	14
Minimum Inlet	MT	4	4
Manifold	MT	-0.2 ± 0.1	-0.2 ± 0.1
NOTE: All readings must be taken while heater is operating. Any adjustments or readings made while heater is off will result in performance problems.			

Table 3.

OUTDOOR INSTALLATION (U.S. and Canada)

For heaters located outdoors, using the built-in stackless venting system.

⚠WARNING

Risk of explosion if a unit burning propane gas is installed in a pit or other low spot. Propane is heavier than air. Do not install the heater using propane in pits or other locations where gas might collect. Consult your local building code officials to determine installation requirements and specific installation restrictions of the heater relative to propane storage tanks and filling equipment. Installation must meet the requirements for the Standard for the Storage and Handling of Liquid Petroleum Gases, ANSI/NFPA 58 (latest edition) in the U.S., or CAN/CSA B149.2 (latest edition) in Canada. Consult local codes and fire protection authorities about specific installation restrictions.

Locate the heater on a level surface in an open area that is protected from drainage or run-off. Install the heater in an area where leaves or other debris will not collect on or around the heater.

To avoid damage to the electronic components in the heater, take care to prevent prolonged exposure to driving sources of water (such as lawn sprinklers, heavy roof runoff, hoses, etc.). Avoid operation in persistent, extreme, moist or salty environments. In extreme weather, shut down the heater and disconnect the power to it until the weather has moderated. In areas subject to hurricanes or very high winds, purchase the Bolt Down Bracket Kit, P/N 460738.

HEATER CLEARANCES – OUTDOOR

IMPORTANT!

- **In an outdoor installation it is important to ensure water is diverted from overhanging eves with a proper gutter/drainage system. The heater must be set on a level foundation for proper drainage.**
- **This unit shall not be operated outdoors at temperatures below -20° F.**

If the heater is located under a roof overhang, there must be at least three (3) feet (1m) of clearance between the bottom of the overhang and the top of the heater exhaust vent, see Figure 8. If the heater is under a roof overhang, the space around the heater must be open on three sides. **DO NOT, under any circumstances, install the heater under ANY deck.**

For Heater mounting bolts and clamps, purchase separately Bolt Down Bracket Kit, Part No. 460738.

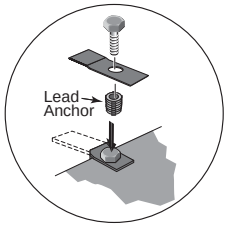

For minimum exhaust vent clearances for all building openings, including but not limited to vented eaves, doors, windows, gravity air inlet, see Figure 9, show below.

In Canada, the heater must be installed with the top of the vent at least 10 feet (3m) below, or to either side of, any opening into a building.

Orient the heater for convenient access to the water connections and the gas and electrical connections.

Note: Check local building codes for installing the heater from any property line set back requirements (see the installation diagram below).

⚠CAUTION

If installing the heater next to or near an air conditioning unit or a heat pump, allow a minimum of 36 in. (91.4 cm) between the air conditioning unit and the heater.

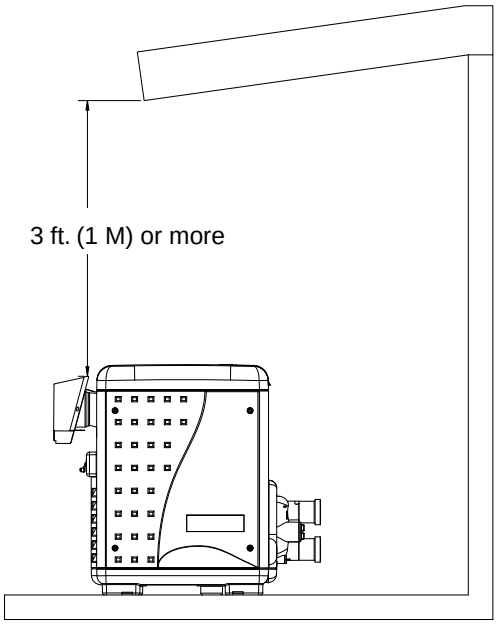

Figure 8.

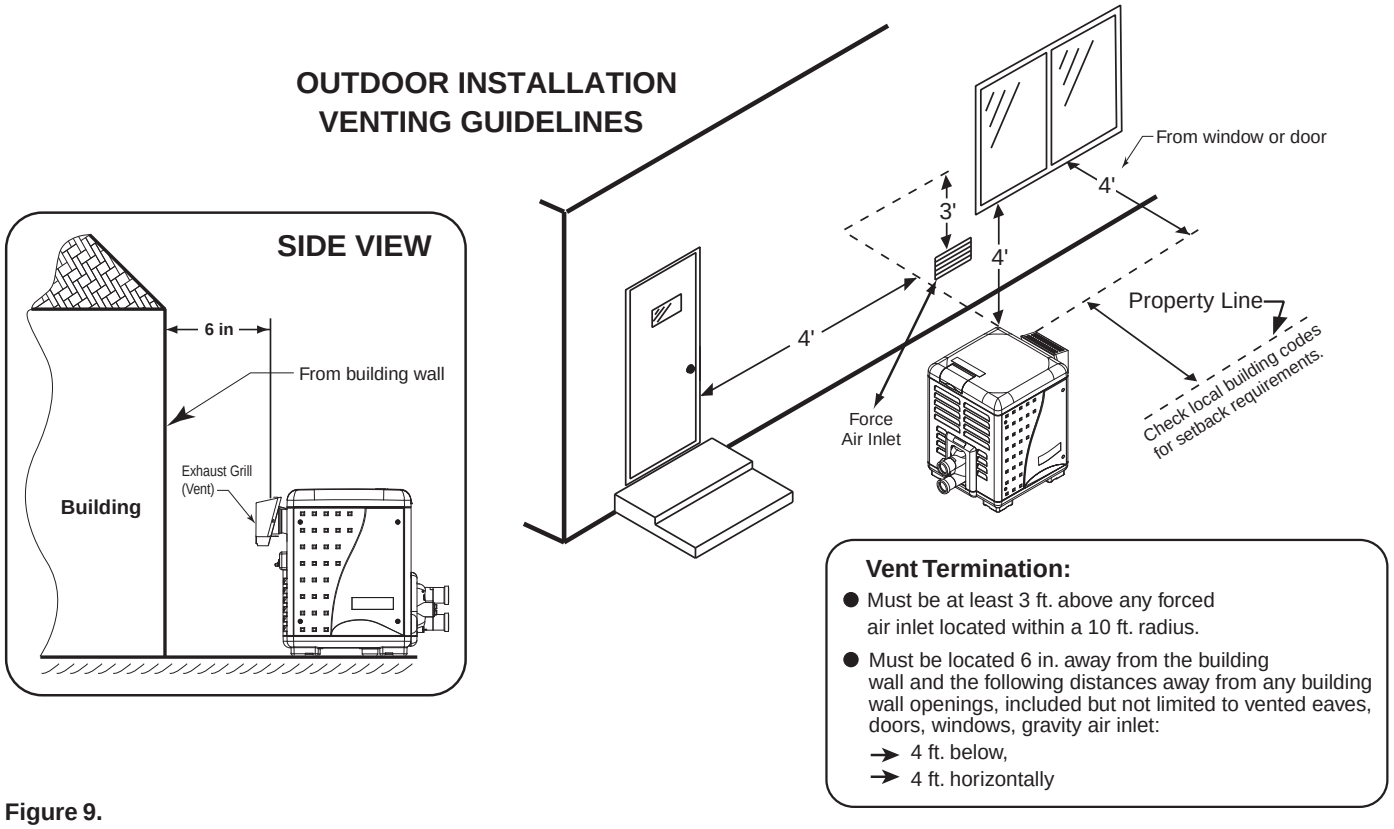

Figure 9.

INDOOR VENTING — General Requirements

The heater may be installed as a Category I or Category III appliance.

Vented Appliance (Category I) – **Vertical only**

An appliance that operates with a *nonpositive* vent static pressure and with a vent gas temperature that avoids excessive condensate production in the vent, see pages 20-23.

Vented Appliance (Category III) – **Vertical or Horizontal**

An appliance that operates with a *positive* vent static pressure and with a vent gas temperature that avoids excessive condensate production in the vent, see pages 24-26.

If you are considering connecting this heater to a pre-existing vent system, make sure that the vent system meets the appropriate venting requirements as given in this manual on pages 18-28. If not, replace the vent system. **DO NOT** use a draft hood with this heater.

The MasterTemp heaters are capable of a 270-degree discharge rotation and operate with a positive vent static pressure and with a vent gas temperature less than 400° F (204° C). The total length of the horizontal run must not exceed the length that is listed in Table 11 on page 21-22.

HEATER CLEARANCES — General Requirements

INDOOR INSTALLATION (U.S.) OR OUTDOOR SHELTER (CANADA)

The following clearances must be maintained from combustible surfaces:

TOP .....6 in. (15 cm)
EXHAUST SIDE .....6 in. (15 cm)
HEADER SIDE .....6 in. (15 cm)
DOOR PANELS† .....6 in. (15 cm)

Note (†) For service access it is advisable to allow for sufficient clearance on at least one door panel. The heater is design certified by CSA International for installation on combustible flooring. For installation on carpeting, the heater must be mounted on a metal or wood panel that extends at least three inches (10cm) beyond the base of the heater. If the heater is installed in a closet or alcove, the entire floor shall be covered by the panel. On an outdoor shelter installation, the exhaust discharges into a vent pipe. Orient the heater so that the vent pipe does not interfere with adjustment of the operating controls. The control panel located on the top panel can be rotated to any of the three sides of the heater for easy access. However, the control panel must not be located on the side where the vent is located.

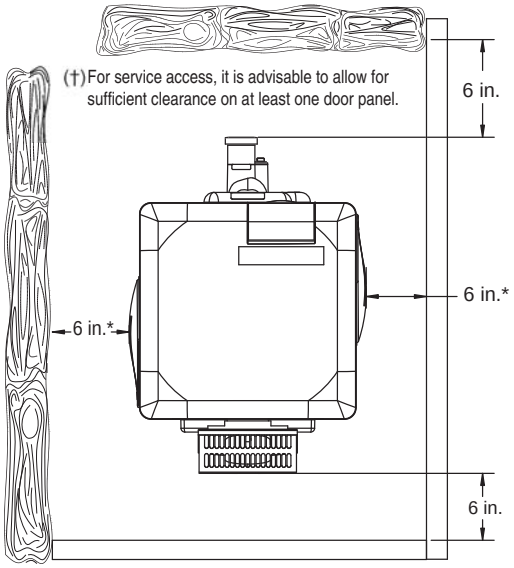

Figure 10.

OUTSIDE VENT COVER REMOVAL

The heater is supplied from the factory with a built-in stackless outside vent for outdoor installation. Remove the outside vent cover for outdoor shelter installation.

COMBUSTION AIR SUPPLY

For indoor installation, the heater location must provide sufficient air supply for proper combustion and ventilation of the surrounding area.

The minimum requirements for the air supply specify that the room in which a heater is installed should be provided with two permanent air supply openings; one within 12 inches (30cm) of the ceiling, the other within 12 inches (30cm) of the floor for combustion air, in accordance with the latest edition of ANSI Z223.1, or the National Fuel Gas code, the CSA B149.1, Natural Gas and Propane Installation Codes, as applicable, and any local codes that may apply. These openings shall directly, or through duct, connect to outdoor air.

Note: For indoor installations where combustion air might be insufficient, see "Direct Air Intake Duct with 3-inch PVC Pipe (Indoor Installation)" below.

Air Supply Requirements Guide

for MasterTemp Heaters

Minimum Net Free Open Area for Each Opening* (Square Inches/Centimeters)				
Model	All Air From Inside Building		All Air From Outside Building	
	Combustion	Vent	Combustion	Vent
175	200 sq. in. 1290 sq. cm.	200 sq. in. 1290 sq. cm.	50 sq. in. 323 sq. cm.	50 sq. in. 323 sq. cm.
200	200 sq. in. 1290 sq. cm.	200 sq. in. 1290 sq. cm.	50 sq. in. 323 sq. cm.	50 sq. in. 323 sq. cm.
250	250 sq. in. 1613 sq. cm.	250 sq. in. 1613 sq. cm.	63 sq. in. 406 sq. cm.	63 sq. in. 406 sq. cm.
300	300 sq. in. 1935 sq. cm.	300 sq. in. 1935 sq. cm.	75 sq. in. 484 sq. cm.	75 sq. in. 484 sq. cm.
400	400 sq. in. 2580 sq. cm.	400 sq. in. 2580 sq. cm.	100 sq. in. 645 sq. cm.	100 sq. in. 645 sq. cm.
* Area indicated is for one of two openings; one at floor level and one at the ceiling.				

Table 4.

Direct Air Intake Duct with 3-inch PVC Pipe (Indoor Installation)

For indoor heater installations where combustion air supply might be insufficient, the MasterTemp® Heater is certified for a direct air intake duct using 3-inch PVC pipe. If outside air is drawn through 3" PVC duct directly into the heater, PVC pipe can be installed in accordance with the following requirements:

The air intake opening MUST be installed at least 1 ft. above the roof line or normal snow levels for free air flow. The Category I or III exhaust vent termination cap must have at least 3 ft. minimum vertical clearance from air intake duct. (See diagram on page 20).

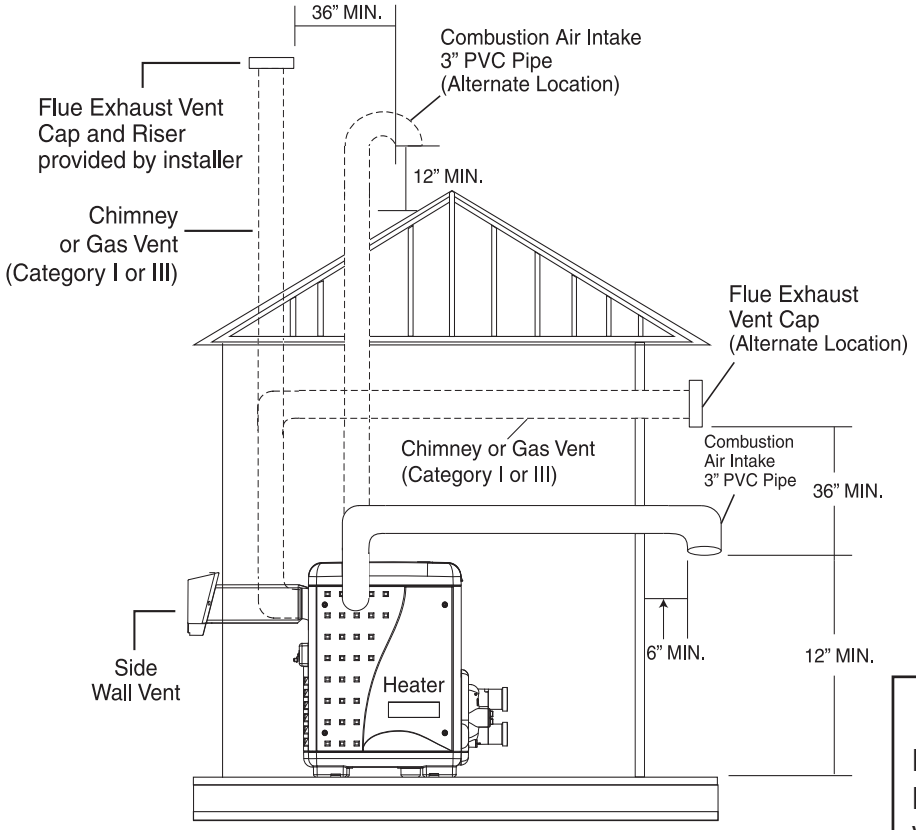

Combustion 3 in. PVC Pipe Inlet Air Intake Duct Requirements*

Combustion Air Intake 3 in. Pipe (Vertical or Horizontal)	
No. of 90° Elbows	Maximum Length in Feet (M)
0	70 ft. (21.3 M)
1	58 ft. (17.7 M)
2	46 ft. (14.0 M)
3	34 ft. (10.4 M)
4	22 ft. (6.7 M)

Table 5.

⚠WARNING!

DO NOT USE PVC PIPE FOR FLUE EXHAUST VENT. FLUE EXHAUST VENT TEMPERATURES CAN BE IN EXCESS OF 400° F. FLUE EXHAUST VENT **MUST BE** CATEGORY I or CATEGORY III METAL VENT.

Note (*): Combustion Air Intake Duct Connection Kit (Part Number 461031) for all MasterTemp heater models can be purchased separately. See page 52 for parts list.

NOTE

Each 90-degree elbow reduces the maximum horizontal PVC air intake duct run by 12 feet and each 45-degree elbow in the PVC air intake duct run reduces the maximum run by 6 feet. See the Table 5 above for the maximum lengths using 90-degree elbows.

Corrosive Vapors and Possible Causes

Area	Likely Contaminants
Chlorinated swimming pools and spas	Pool or spa cleaning chemicals. Acids, such as hydrochloric or muriatic acid.
New construction and remodeling areas	Glues and cements, construction adhesives, paints, varnishes, and paint and varnish strippers. Waxes and cleaners containing calcium or sodium chloride.
Beauty parlors	Permanent wave solutions, bleaches, aerosol cans containing chlorocarbons or fluorocarbons.
Refrigeration plants or various industrial finishing and processing plants	Refrigerants, acids, glues and cements, construction adhesives.
Dry cleaning and laundry areas	Bleaches, detergents, or laundry soaps containing chlorine. Waxes and cleaners containing chlorine, calcium or sodium chloride.

Table 6.

⚠CAUTION

Chemicals should not be stored near the heater installation. Combustion air can be contaminated by corrosive chemical fumes which can void the warranty.

VENT INSTALLATION – INDOOR INSTALLATION (U.S.) OR OUTDOOR SHELTER (CANADA)

(Category I)

Always vent the heater to the outdoors, see Note*.

• Vent it vertically using Type "B" double wall vent connector pipe.

NOTE *: Vent must be at least eight (8) feet away from nearest vertical surface. Vents extending five (5) feet or more above the roof must be braced or guyed. Consult your local code officials for detailed information.

Locate the heater so as to minimize the length of horizontal venting and the number of vent elbows required. Horizontal vent runs must slope up 1/4" per foot (2cm/M) from the heater to allow exhaust condensate to drain and it is recommended to have a condensate drain as described in the venting installation instructions.

VERTICAL VENTING - NEGATIVE PRESSURE

(See Figures 11, 12 and 13)

Vent the heater vertically in a negative pressure (positive draft) system in accordance with the National Fuel Gas Code, ANSI Z223.1/NFPA 54 and/or CSA B149.1, Natural Gas and Propane Installation Codes, and local codes. Type "B" Double-wall vent connector is recommended; however single-wall pipe is allowed by the National Fuel Gas Code in some circumstances. Consult your local code official for detailed information. **Do not** use a draft hood with this heater.

To connect a negative pressure metal gas vent to the heater, order the appropriate Metal Flue Collar from the chart below:

Metal Flue Collar	Part No.
4 x 6"	77707-0076
4 x 8"	77707-0077

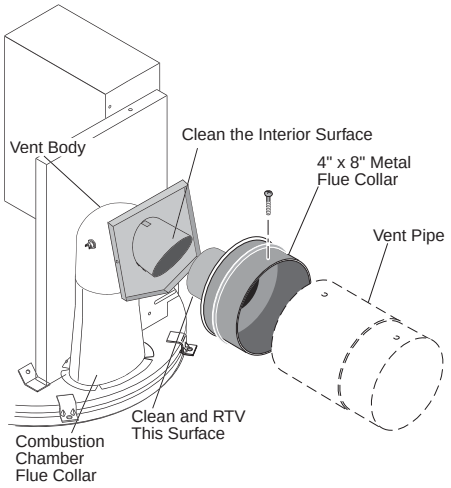

Figure 11.

1. See Table 7, to determine allowable vent sizes for your heater.

NOTICE: Table 7 is for installations in which the total lateral vent length (that is, the horizontal distance from the flue collar to the main vertical portion of the vent) is less than 1/2 the total vent height (the vertical distance from the flue collar to the vent termination) and which have three or less elbows in the system. For venting systems which do not meet these conditions, consult the National Fuel Gas Code, ANSI Z223.1 (U.S.), or the standards CSA B149.1 and B149.2 (Canada).

Read "VERTICAL VENTING – NEGATIVE PRESSURE" before using this table.

Table 7. **– Permitted Minimum and Maximum Vent Heights By Size and Heater Model**

Type "B" Double-Wall Vent with Type "B" Double-Wall Connector in Feet (Meters)					
Vent Size	**Model 175 Height min./max.**	**Model 200 Height min./max.**	**Model 250 Height min./max.**	**Model 300 Height min./max.**	**Model 400 Height min./max.**
6 in.	6 ft. (1.8)/100 ft. (30.5)	6 ft. (1.8)/100 ft. (30.5)	18 ft. (5.5)/100 ft. (30.5)	30 ft. (9)/100 ft. (30.5)	Not Rec.
7 in.	6 ft. (1.8)/100 ft. (30.5)	6 ft. (1.8)/100 ft. (30.5)	8 ft. (2.4)/100 ft. (30.5)	10 ft. (3)/100 ft. (30.5)	15 ft. (4.6)/100 ft. (30.5)
8 in.	6 ft. (1.8)/100 ft. (30.5)	6 ft. (1.8)/100 ft. (30.5)	6 ft. (1.8)/100 ft. (30.5)	6 ft. (1.8)/100 ft. (30.5)	8 ft. (2.4)/100 ft. (30.5)
9 and 10 in.	6 ft. (1.8)/50 ft. (15.3)	6 ft. (1.8)/50 ft. (15.3)	6 ft. (1.8)/50 ft. (15.3)	6 ft. (1.8)/100 ft. (30.5)	6 ft. (1.8)/100 ft. (30.5)
Type "B" Double-Wall Vent with Single-Wall Connector in Feet (Meters)					
Vent Size	**Model 175 Height min./max.**	**Model 200 Height min./max.**	**Model 250 Height min./max.**	**Model 300 Height min./max.**	**Model 400 Height min./max.**
6 in.	6 ft. (1.8)/15 ft. (4.6)	6 ft. (1.8)/15 ft. (4.6)	6 ft. (1.8)/15 ft. (4.6)	Not Rec.	Not Rec.
7 in.	6 ft. (1.8)/8 ft. (2.4)	6 ft. (1.8)/8 ft. (2.4)	6 ft. (1.8)/8 ft. (2.4)	10 ft. (3)/20 ft. (6)	15 ft. (4.6)/50 ft. (15.3)
8 in.	Not Rec.	Not Rec.	Not Rec.	6 ft. (1.8)/20 ft. (6)	8 ft. (2.4)/20 ft. (6)
9 in.	Not Rec.	Not Rec.	Not Rec.	Not Rec.	6 ft. (1.8)/6 ft. (1.8)
10 in.	Not Rec.	Not Rec.	Not Rec.	Not Rec.	Not Rec.

NOTE

The allowable vent runs for each vent pipe diameter are different and can not be exceeded.

Each 90-degree elbow reduces the maximum horizontal vent run by 12 feet and each 45-degree elbow in the vent run reduces the maximum vent run by 6 feet. See Table 7 on page 21 for the maximum vent lengths using 90-degree and 45-degree elbows.

2. Install the metal Flue Collar in the Vent Body of the heater (located under the outside vent cover). Fasten the metal Flue Collar to the Vent Body with two #10 sheet metal screws. Use high temperature silicone RTV to seal the Flue Collar to the Vent Body. Before connecting the metal Flue Collar to the Vent Body, wet a clean cloth or paper towel with isopropyl alcohol (rubbing alcohol) and vigorously wipe the socket of the Vent Body. Immediately wipe the cleaned surfaces dry with a clean cloth or paper towel. Repeat for the exterior of the 4" end of the metal Flue Collar. Attach the metal Flue Collar to the Vent Body using the RTV supplied with the kit, following the vent manufacturer's instructions (included with kit).
3. Attach the vent pipe to the metal Flue Collar with sheet-metal screws.

⚠WARNING

Risk of fire or asphyxiation if vent is not assembled according to manufacturer's instructions or if vent parts from different manufacturers are mixed. Vent parts from different manufacturers ARE NOT interchangeable. Mixing parts from more than one manufacturer may cause leaks or damage to vent. When assembling a vent, pick one manufacturer and be sure that all vent parts come from that manufacturer and are specified by the manufacturer for your system. Follow manufacturer's instructions, local code requirements, National Fuel Gas Code requirements (U.S.) or standards CSA B149.1 and B149.2 (Canada) carefully during assembly and installation.

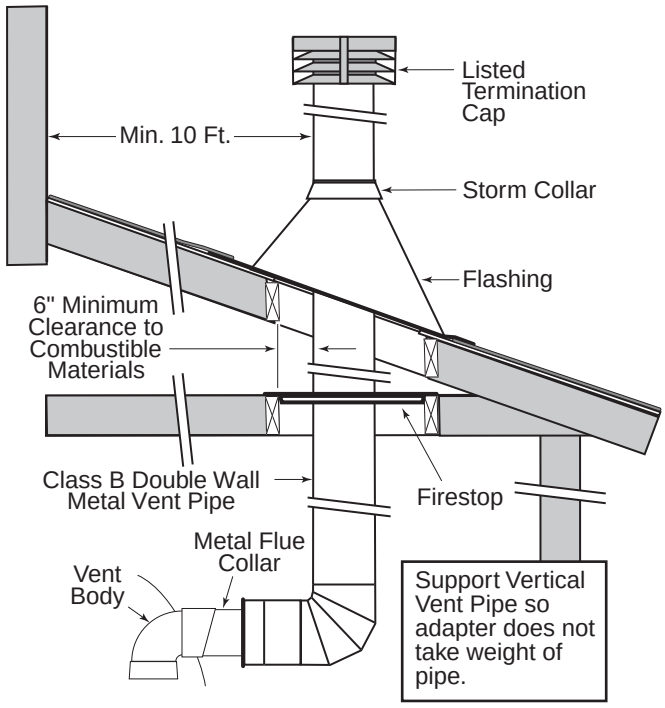

Figure 12. – Typical Metal Vent Pipe Installation - U.S. (Vertical – Negative Pressure)

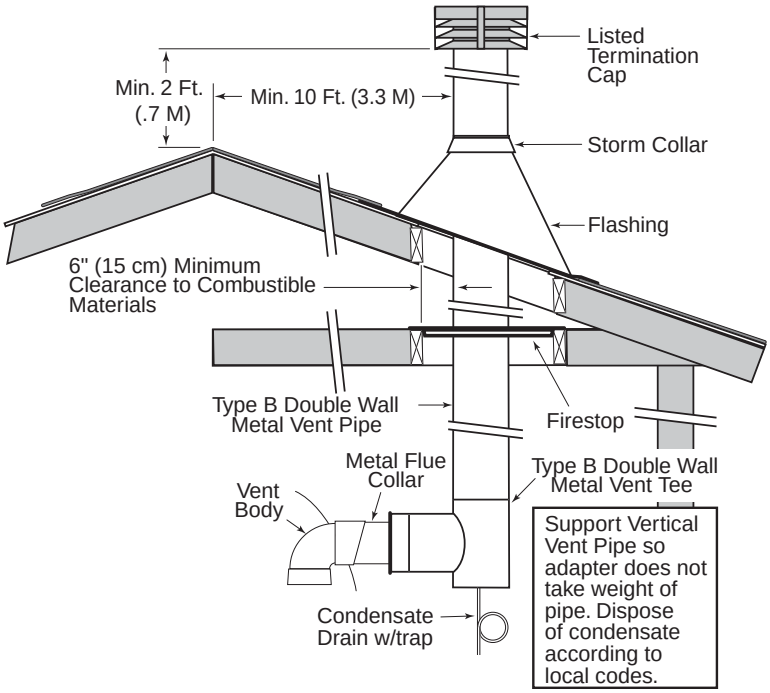

Figure 13. – Typical Metal Vent Pipe Installation - Canada (Vertical – Negative Pressure)

4. Install vent pipe so that it can expand and contract freely as the temperature changes. Support the vent pipe according to applicable codes and the vent manufacturer's instructions. Pipe support must allow the vent pipe free movement out and back, from side to side, or up and down as necessary, without putting a strain on the heater or vent body. Slope horizontal pipe runs up from the heater at least 1/4" per foot (2cm per meter). Install Listed condensate drains at low points where condensate might collect. Plumb condensate drains to a drain through hard piping or high temperature tubing such as silicone rubber or EPDM rubber – do not use vinyl or other low temperature tubing. Follow drain manufacturer's installation instructions.

5. Use Listed fire stop for floor and ceiling penetrations. Use Listed thimble for wall penetrations. Use a Listed roof flashing, roof jack, or roof thimble for all roof penetrations. Do not fill the space around the vent (that is, the clear air space in the thimble or fire stop) with insulation. The roof opening must be located so that the vent is vertical.

6. **Do not run the heater vent into a common vent with any other appliance.**

⚠WARNING

Fire Hazard. Do not vent the heater directly into a masonry chimney. Installation into a masonry chimney must use a chimney liner and must meet the National Fuel Gas Code, ANSI Z223.1/NFPA 54 and/or CSA B149.1, Natural Gas and Propane Installation Codes requirements and all local code requirements.

⚠WARNING

Risk of fire, carbon monoxide poisoning, or asphyxiation. It is recommended to use a CO Monitor and Fire Alarm in rooms that contain gas fired appliances.

HORIZONTAL OR VERTICAL VENTING - POSITIVE PRESSURE (See Figures 14, 15, and 16)

(Category III)

Vent the heater either horizontally or vertically using an optional vent adapter of the 4-inch special gas approved Category III vent pipes. Install the vent pipe in accordance with local codes and the provisions of the National Fuel Gas Code, ANSI Z223.1 (U.S.), or the standards CSA B149.1, Natural Gas and Propane Installation Codes (Canada), and the vent manufacturer's instructions. Do not use a draft hood with this heater. Install the vent according to the vent manufacturer's detailed instructions. **Note:** Maintain clearance between the vent pipe and combustible surfaces according to the vent manufacturer's instructions and code requirements. Do not place any insulating materials around the vent or inside the required clear air space surrounding the vent. See Table 11 for maximum permissible vent lengths.

NOTE

The allowable vent runs for each vent pipe diameter are different and can not be exceeded. Each 90° elbow reduces the maximum horizontal vent run by 12 feet and each 45-degree elbow in the vent run reduces the maximum vent run by 6 ft. See the Table 8 below for the maximum vent lengths using 90° elbows.

The MasterTemp heater is a "Category III" appliance **(which requires a four (4) inch special gas approved "Category III" vent pipe)** and is a forced-draft pool and spa heater which uses positive pressure to push flue gases through the vent pipe to the outside. ***Flue gases under positive pressure may escape into the dwelling with any cracks or loose joints in the vent pipe, or improper vent installation.*** The vent pipe must be of a sealed-seam construction, such as those listed for use with "Category III Appliances", and for operating temperatures less than 400°F (204°C). Vent pipe construction will be of UL 1738 approved non-corrosive material, such as stainless steel. A condensate trap may be needed. The use of "Approved" thimbles, roof jacks and/or side vent terminals are required; and the proper clearances to combustible materials must be maintained in accordance with type of vent pipe employed—in the absence of a clearance recommendation by the vent pipe manufacturer, the requirements of the Uniform Mechanical Code should be met. ***See page 19, for heater ventilation air requirements.*** It is recommended that vent runs over 18 feet may need to be insulated to reduce condensation related problems and/or the use of a condensate trap in the vent run close to the heater may be necessary in certain installations such as cold climates. Horizontal vents 3' (1M) or less in length do not require a condensate tee. The MasterTemp heater is suitable for through-the-wall venting.

Table 8.

4 in. Special Gas Vent (Vertical or Horizontal)*	
No. of 90° Elbows	**Maximum Length in Feet (M)**
0	70 ft. (21.3M)
1	58 ft. (17.7M)
2	46 ft. (14.0M)
3	34 ft. (10.4M)
4	22 ft. (6.7M)

*Minimum vent length is one foot (.34M), or in accordance with vent manufacturer's instruction, and local and national codes. Horizontal vents 3'(1M) or less in length do not require a condensate tee, but must slope down toward the outlet at 1/4" to the foot (2cm/M) to allow condensate to drain.

⚠CAUTION

Do **NOT** combine exhaust vent pipes to a common exhaust vent in multiple unit installations. Run separate vent pipes.

CONNECTING SPECIAL METALIC GAS VENT TO THE HEATER

1. Order an optional appliance adapter kit, *(Pentair offers optional appliance adapter kits, call Customer Service at (800) 831-7133 for more information):* Part No. 77707-0086 for Saf-T Vent® or Saf-T Vent® CI. Part No. 77707-0087 for Z-Vent.
2. Remove the outside vent cover.
3. Install the Appliance Adapter in the Vent Body of the heater (located under the outside Vent Cover). Before connecting the Appliance Adapter to the Vent Body, wet a clean cloth or paper towel with isopropyl alcohol (rubbing alcohol) and vigorously wipe the socket of the Vent Body. Immediately wipe the cleaned surfaces dry with a clean cloth or paper towel. Repeat for the exterior of the heater end of the Appliance Adapter. Attach the appliance adapter to the vent body using the adhesive specified by the vent manufacturer, following the vent manufacturer's instructions.

⚠WARNING

Risk of carbon monoxide poisoning if adapter is improperly attached. Mechanical connections (such as screws) can cause cracking and leaks in the adapter. Do **NOT** drill holes or use screws to connect the appliance adapter to the heater vent body. Attach with manufacturer's specified adhesive.

⚠WARNING

Risk of fire or asphyxiation if vent is not assembled according to manufacturer's instructions or if vent parts from different manufacturers are mixed. Vent parts from different manufacturers ARE NOT interchangeable. Mixing parts from more than one manufacturer may cause leaks or damage to vent. When installing a vent, pick one manufacturer and be sure that all vent parts come from that manufacturer and are specified by the manufacturer for your system. Follow manufacturer's instructions and local and National Fuel Gas Code (U.S.) or CSA B149.1, Natural Gas and Propane Installation Codes (Canada) requirements carefully during assembly and installation.

4. Install vent pipe so that it can expand and contract freely as the temperature changes. Support the vent pipe according to applicable codes and vent manufacturer's instructions. Pipe support must allow the vent pipe free movement out and back, from side to side, or up and down as necessary, without putting a strain on the heater or vent body. It is recommended to slope the horizontal pipe runs up from the heater at least 1/4" per foot (2cm/M). Install "Approved" condensate drains at low points where condensate might collect. Plumb condensate drains to a drain through hard piping or high-temperature tubing such as silicone rubber or EPDM rubber – do not use vinyl or other low temperature tubing. Follow drain manufacturer's installation instructions.
5. Use an "Approved" firestop for floor and ceiling penetrations. Use an "Approved" thimble for wall penetrations. Use an "Approved" roof flashing, roof jack, or roof thimble for all roof penetrations. Do not fill the space around the vent (that is, the clear air space in the thimble or firestop) with insulation. The roof opening must be located so that the vent is vertical.
6. **Vent Termination – Vertical** (See Figures 14 and 15), for height of vent termination above the roof. Use an "Approved" vent terminal specified by local and national codes and your manufacturer's instructions. A roof termination must be vertical. In Canada, the Vent Cap location shall have a minimum clearance of 4 feet (1.2M) horizontally from electric meters, gas meters, regulators, and relief openings.
7. Make sure entire installation is sealed according to approved standard.

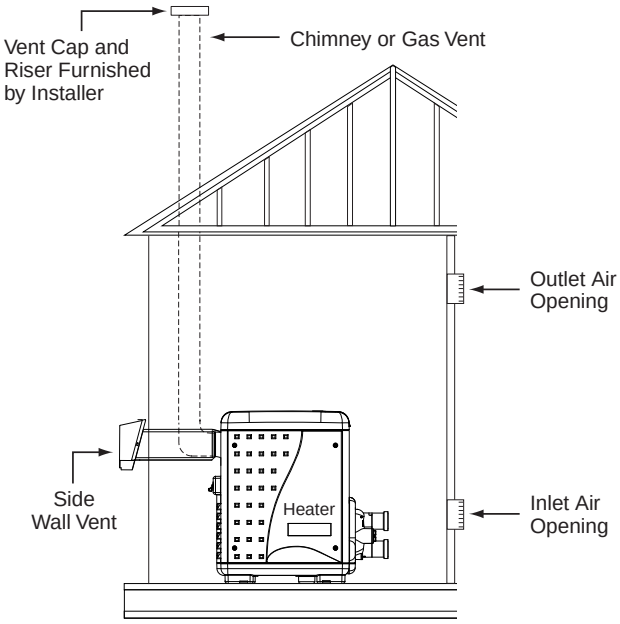

Figure 14.

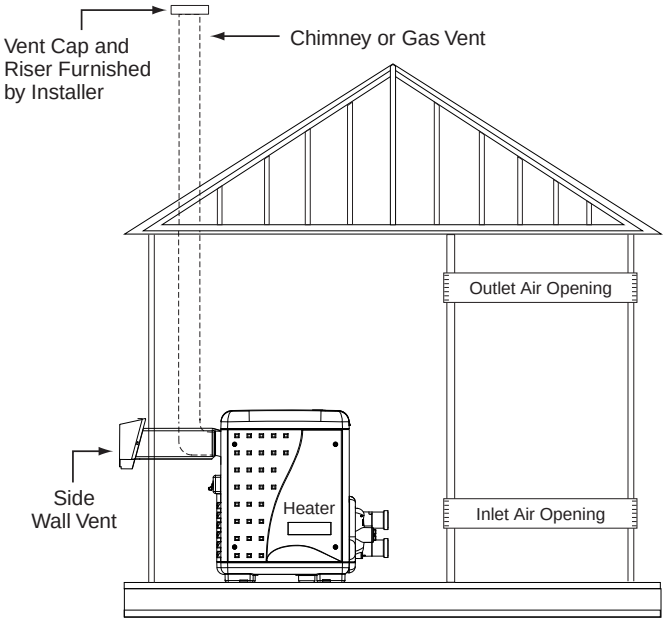

Figure 15.

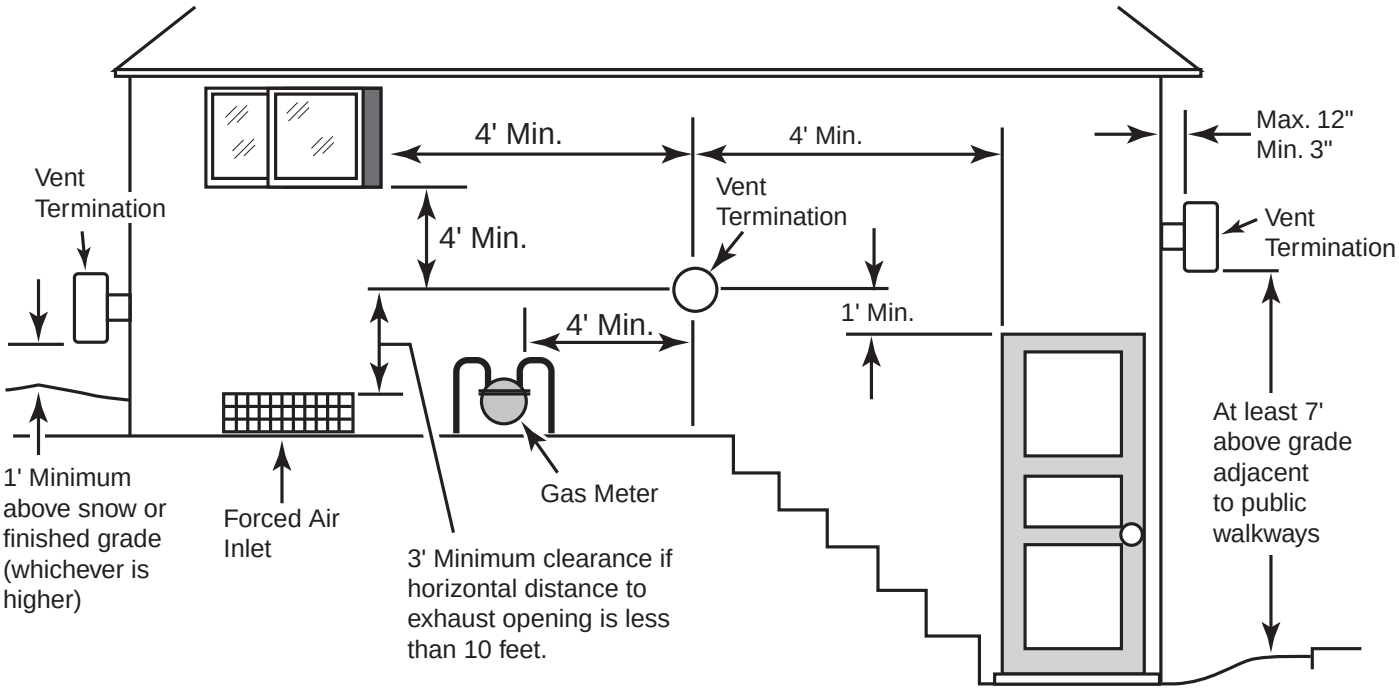

Figure 16.

8. **Vent Termination – Horizontal**

The terminal must be located (U.S. – See Figure 16):

- at least 3" and at most 12" out from the wall (see Figure 17), following the vent manufacturer's instructions
- at least 12" above finished grade or the normally expected snow accumulation level, whichever is higher
- at least 4 feet below or horizontally from, or 1 foot above, any doors or windows or gravity air inlet to a building
- at least 3 feet above any forced air inlet located within 10 feet
- at least 4 feet horizontally from electric meters, gas meters, regulators and relief equipment
- at least 7 feet above grade adjacent to walkways or similar traffic areas

The terminal must be located (Canada – See Figure 16):

- at least 10 feet (3.3M) from any opening into a building
- at least 12" (.3M) above finished grade or the normally expected snow accumulation level, whichever is higher
- at least 4 feet (1.2M) horizontally from electric meters, gas meters, regulators and relief equipment
- at least 7 feet (2.1M) above grade adjacent to walkways or similar traffic areas

Allow at least three feet (1M) vertical clearance over vent termination when terminating under an overhang.

Avoid corners or alcoves where snow or wind could have an effect. Exhaust may affect shrubbery and some building materials. Keep shrubbery away from termination. To prevent staining or deterioration, sealing or shielding exposed surfaces may be required.

⚠WARNING

Fire Hazard. Do not run the heater vent into a common vent with any other appliance. Do not run the Special Gas Vent into, through, or within any active vent such as a factory built or masonry chimney.

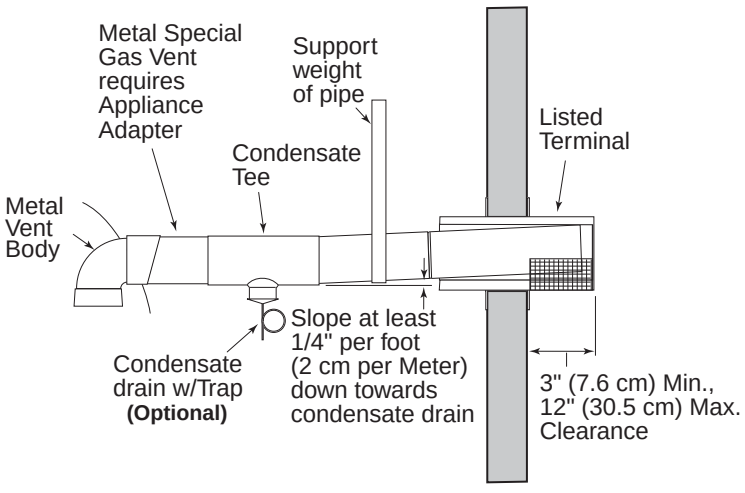

Figure 17.

OUTDOOR SHELTER INSTALLATION

In Canada, this pool heater can only be installed outdoors or in an enclosure that is not normally occupied and has no direct openings into occupied areas.

⚠WARNING

Risk of asphyxiation if exhaust is not correctly vented. Follow venting instructions exactly when installing heater. Do not use a draft hood with this heater, as the exhaust is under pressure from the burner blower and a draft hood will allow exhaust fumes to blow into the room housing the heater. Exhaust venting to the outdoors is required for all outdoor shelter installations.

⚠WARNING

Risk of explosion if a unit burning propane gas is installed in a pit or other low spot. Propane is heavier than air. Do not install the heater using propane in pits or other locations where gas might collect. Consult your local building code officials to determine installation requirements and specific installation restrictions of the heater relative to propane storage tanks and filling equipment. Installation must meet the requirements for the Standard for the Storage and Handling of Liquefied Petroleum Gases, CAN/CSA B149.2 (latest edition) or ANSI/NFPA 58 (latest edition). Consult local codes and fire protection authorities about specific installation restrictions.

The heater is design certified by CSA International for installation on combustible flooring; in alcoves; basements; in closet or utility rooms (in the U.S.).

GARAGE OR UTILITY ROOM INSTALLATION

In Canada, the heater must be installed in a room that is not normally occupied and has no openings directly to occupied areas.

⚠WARNING

Risk of fire and explosion if installed at floor level in an automotive garage or near gasoline or flammable liquid storage. Gasoline fumes are heavier than air and will settle to floor level in closed spaces. Gasoline fumes and spilled gasoline or other volatile liquids (such as some paints and varnishes) will travel across the floor and can be ignited by a gas appliance.

In any utility room or residential garage installation, install the heater with the base at least 18 inches (.5M) above the floor, see Figure 18. In a garage, install a rail or wall to protect the heater from physical damage by a moving vehicle.

Provide an adequate ventilation air supply (See Table 4, page 19)**.**
Choose a location that will avoid contamination by chemical fumes.

⚠CAUTION

A Propane (LPG) fired heater must not be installed in a garage in Massachusetts, by order of the Massachusetts State Fire Marshal. For more information, call the Massachusetts State Fire Marshal's office.

NOTICE: Combustion air contaminated by corrosive chemical fumes can damage the heater and will void the warranty (See Table 6, page 20).

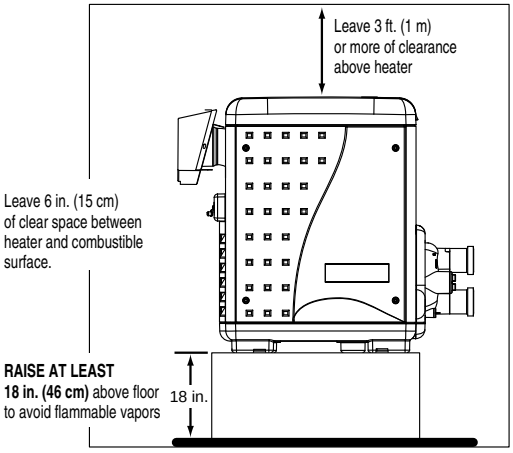

Figure 18.

CONTROL PANEL INDEXING

On an outdoor shelter installation, the exhaust discharges into a vent pipe. Orient the heater so that the vent pipe does not interfere with adjustment of the operating controls. The control panel located on the top panel can be rotated to any of the three sides of the heater for easy access, see Figure 19.

1. Remove the bolts from the door panels. Remove both door access panels.
2. Remove the four corner wing nuts that secure the top panel. Lift the top panel upward to remove the top panel.
3. Rotate the top panel to the desired position located at 90° angles. *Note that the control panel must **NOT** be located on the side where the vent is located.*
4. Replace the top panel down onto the side panels. Be sure that there are no wires caught under the panel.
5. Secure the top panel using the four corner wing nuts.
6. Reattach the door access panels.

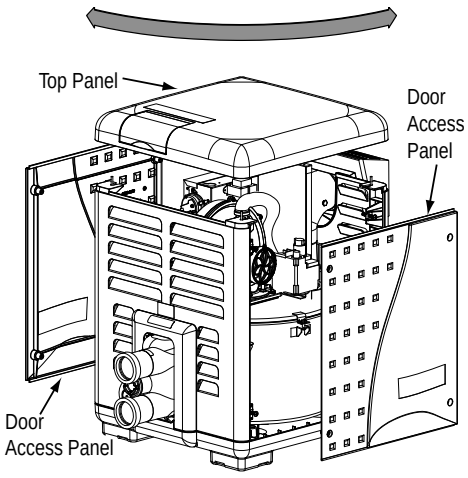

Figure 19.

FINAL INSTALLATION CHECK

Check that horizontal vent pipe runs slope uniformly at least 1/4" per foot (2cm per meter) to condensate drain(s). No sags, no dips, no high or low spots.

Check that vent is supported at elbows, tees, and horizontal and vertical runs according to manufacturer's instructions and code requirements.

Check that vent supports and wall and ceiling penetrations allow free movements up, down, and sideways without putting any strains on the heater or vent body.

Check for at least six inch (15cm) free air clearance between the heater vent pipe and combustible materials.

Check that all joints are completely together and sealed.

In Florida, building codes require that the heater be anchored to the equipment pad or platform to withstand high wind pressures created during hurricanes. A Bolt Down Bracket Kit, P/N 460738, is available with anchor clamps designed to hold the unit to the equipment pad in high wind conditions. Installation of the anchor clamps are recommended in all installations and are required in Florida, (See Florida Building Code 301.13).

For Heater mounting bolts and clamps, purchase separately Bolt Down Bracket Kit, Part No. 460738.

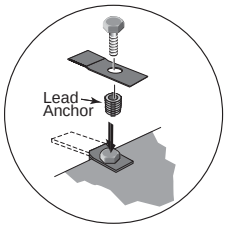

ELECTRICAL CONNECTIONS

Electrical Rating: 60 Hz 120 / 240 Volts AC, single phase

Enclose the incoming AC power line to the heater, in an approved flexible conduit connected directly to the junction box on the inside of the access door panel. Line voltage field wiring should be 14 gauge, with a circuit capacity of 15 Amps.

⚠CAUTION

This heater is designed to operate at 120 or 240 VAC. It is not recommended to be connected to OR operate on a 208 VAC.

NOTE

- Before making any electrical connections to the power supply, remove the access door panels, open the control box and plug in the correct plug (120 VAC or 240 VAC). See plugs below.

⚠CAUTION

The heater ships from the Factory with the 240 VAC plug installed. Installing the 120V plug and then connecting the heater to 240V line current will immediately destroy the transformer, control board and ignition control module, and will void warranty. If you install the 240V plug and connect the heater to 120 VAC line current, the heater will not operate.

- If any of the original wiring supplied with this heater must be replaced, installer must supply (No. 18 AWG, 600V, 105° C. U.L. approved AWM low energy stranded) copper wire or it's equivalent.

Please read the boxes headed **"IMPORTANT! READ ME FIRST!"** on pages 38 and 42 before proceeding.

1. All wiring must be in accordance with all applicable codes.
2. The heater, when installed, must be electrically grounded and bonded in accordance with local codes or, in the absence of local codes, with the National Electrical Code or the Canadian Electrical Code (as applicable). A bonding lug is provided on the outside of the panel under the vent for this purpose.
3. Electrical power circuits to the pool heater must follow local codes and National Electrical Code or Canadian Electrical Code (as applicable).
4. All wiring between the heater and devices not attached to it, or between separate devices which are installed in the field, must be "Type T" wire rated for 35°C rise.
5. All line voltage wiring shall be enclosed in approved flexible conduit, and shall be securely attached to the field wiring box located inside the access door panel. The conduit or cable connector at the field wiring box should contain an insulating bushing or its equivalent to prevent abrasion of the wires as they enter the box.
6. **The filter pump should run continuously when the heater is on, and for at least 5 minutes after the heater turns off.** Any switches in the pump circuit (including circuit breakers) that can disconnect the pump must also disconnect the heater.
7. Do not wire single-pole switches, including protective devices, into a grounded line. The heater is not sensitive to polarity.

Connect the **L1** of the power supply to the **black** wire, the **L2** or neutral lead to the **red** wire, and the **ground** wire to the **green** wire. A time clock controlling the filter pump should have a low-voltage Fireman's Switch that switches off the heater at least 15 minutes before shutting off the pump.



Always use crimp type connectors when connecting two wires.

AC VOLTAGE SELECT PLUGS: (120 VAC or 240 VAC)



Figure 20.

CONNECTION OF FIREMAN'S SWITCH OR REMOTE CONTACT

⚠CAUTION

If, while there is line voltage connected to the heater, you touch either line voltage terminal with any 24VAC wire that is connected to the control board (including the Fireman's Switch jumper), you will immediately destroy the control board and void the warranty.

REMOTE CONTROL CONNECTIONS

1. Switch off power to heater at main circuit breaker panel.
2. Unbolt and remove the access door panels.
3. Open control box cover (see Figure 21).

4a. *To connect a 2-Wire Control* (such as Pentair's IntelliTouch® or EasyTouch® Control Systems) *or a timer:*

- Remove the factory installed jumper from the Fireman's Switch terminals.
- Connect wires between the Fireman's Switch terminals on the heater and the relay. Connect wires from the controller or timer to the Fireman's Switch. Controller, timer or relay should be sized to handle 24VAC at 0.5 Amp (because it will be completing the 24VAC control board circuit on the heater as shown in Figure 22). DO NOT apply line voltage to the Fireman's Switch terminals. Use 18 gauge wire with a minimum 3/64" (1.2mm) thick insulation rated for a temperature rise of at least 105°C.
- Knock-outs are provided to route the wires through the bottom of the control box and past the junction box.

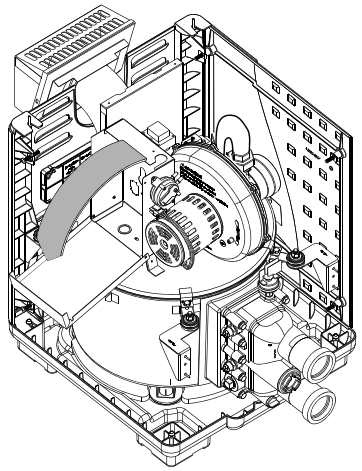

Figure 21.

4b. *To connect a 3-Wire Control:*

- Connect wires between the control board terminals on the heater and the external relays, as shown in Figure 23. Use at least 2 relays per heater, to allow for an "OFF setting" on each heater mode. Select relays that can handle logic level switching. DO NOT apply line voltage to control board terminals.
- Move jumper (as shown on Figure 23) to enable external control and to disable the heater membrane pad's "Pool ON" and "Spa ON" buttons (the "OFF" key on the membrane pad remains functional).
- Knock-outs are provided to route the wires through the bottom and the top of the control box and past the junction box.

5. Close control box cover.
6. Re-install the access door panels.

To control heaters that are operated in parallel, connect wiring at same locations on heater as 2-Wire or 3-Wire Control. It is imperative that each control circuit is isolated from the other control circuits, to avoid that current will flow from one heater to another through the control circuits.

NOTICE: The fuse for the Fireman's Switch is a 1.25 Amp 1¼ x ¼" fast blow fuse, which is commonly available.

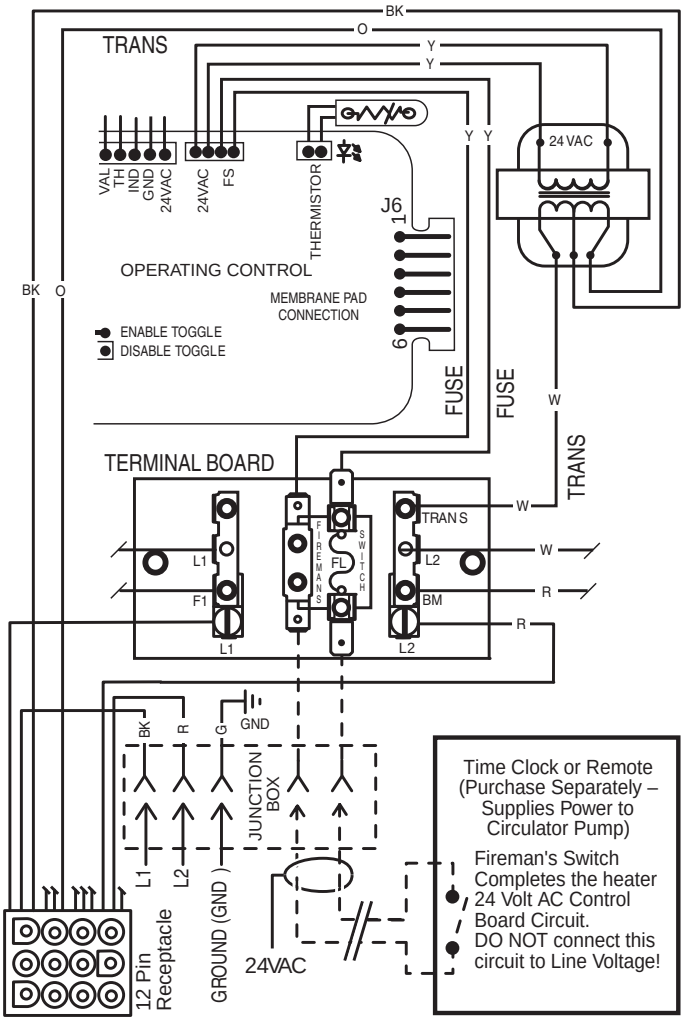

Figure 22.

MASTERTEMP HEATER WIRING DIAGRAM

(3-WIRE SYSTEM)

CONNECTION DIAGRAM

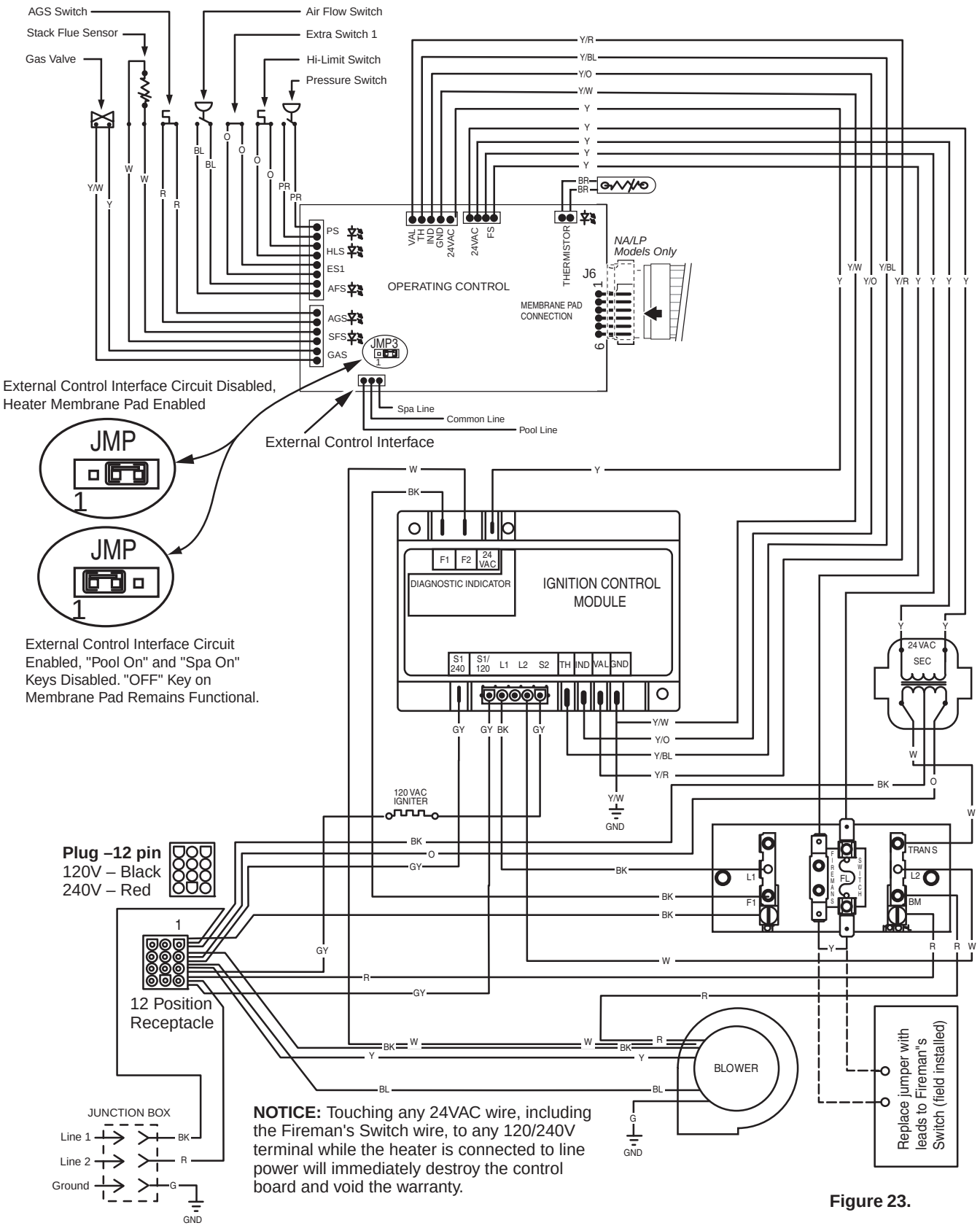

NOTICE: Touching any 24VAC wire, including the Fireman's Switch wire, to any 120/240V terminal while the heater is connected to line power will immediately destroy the control board and void the warranty.

Figure 23.

MASTERTEMP HEATER ELECTRICAL SCHEMATIC LADDER DIAGRAM

LADDER DIAGRAM

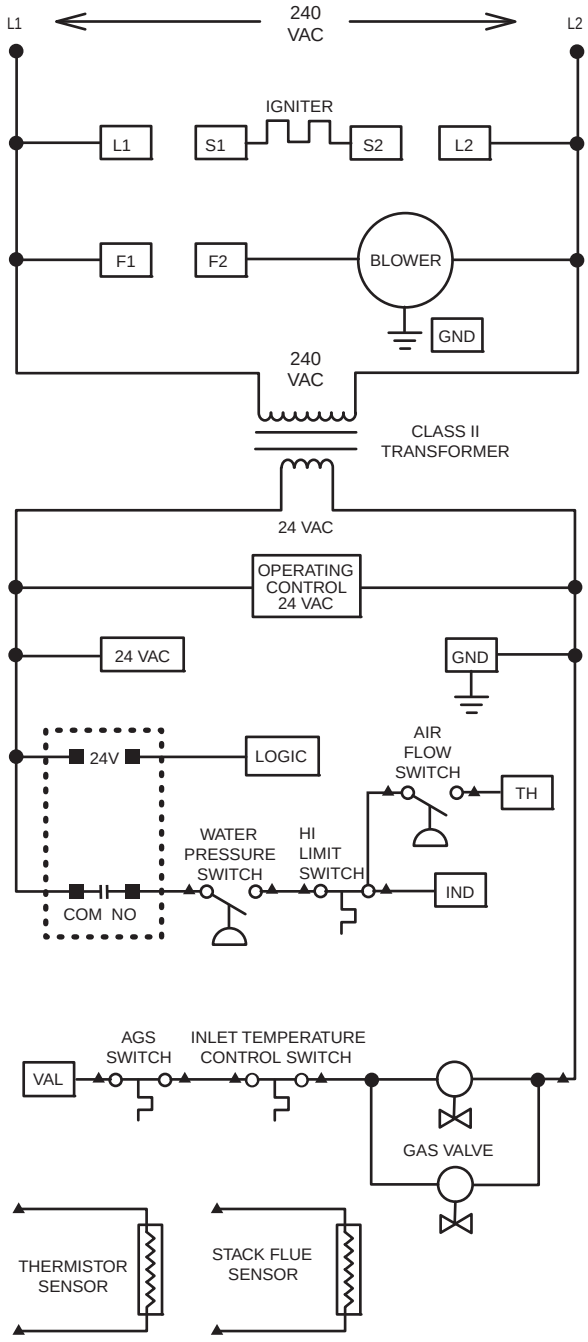

NOTES:

1.) L1 L2 F1 F2 S1 24 VAC S2 GND IND VAL AND TH

ARE CONNECTED ON THE IGNITION MODULE.

2.) ▲ PIN AND SOCKET CONNECTOR.

3.) IF ANY OF THE ORIGINAL WIRES AS SUPPLIED WITH THE APPLIANCE MUST BE REPLACED, THEY MUST BE REPLACED WITH TYPE 105° C OR ITS EQUIVALENT.

Figure 24.

Operation Instructions

BASIC SYSTEM OPERATION

Start pump, make sure the pump is running and is primed, to close the water pressure switch and supply power to heater. Be sure the pool and/or spa is properly filled with water. Follow the Lighting/Operating instructions below.

MASTERTEMP HEATER HSI ELECTRONIC IGNITION LIGHTING/OPERATION

FOR YOUR SAFETY: READ BEFORE LIGHTING

⚠WARNING

If you do not follow these instructions exactly, a fire or explosion may result causing property damage, personal injury or loss of life.

Do not attempt to light the heater if you suspect a gas leak. Lighting the heater can result in a fire or explosion which can cause personal injury, death, and property damage.

START-UP AND OPERATION

START-UP AND SHUTDOWN INSTRUCTIONS ARE ON THE LABEL ATTACHED TO THE COVER OF THE APPLIANCE CONTROL BOX.

BEFORE START-UP

A. This appliance does not have a pilot. It is equipped with an ignition device which automatically lights the burners. Do not try to light the burners by hand.

B. **BEFORE OPERATING,** smell all around the appliance area for gas. Be sure to smell next to the floor because some gas is heavier than air and will settle on the floor.

WHAT TO DO IF YOU SMELL GAS

– Do not try to light any appliance.

– Do not touch any electrical switch; do not use any phone in your building.

– Immediately call your gas supplier from a neighbor's phone. Follow the gas supplier's instructions.

– If you cannot reach your gas supplier, call the Fire Department.

C. Use only your hand to turn the gas control on or off. Never use tools. If you cannot change the ON/OFF setting by hand, don't try to repair it, call a qualified service technician. Forced or attempted repair may result in a fire or explosion.

D. Do not use this heater if any part has been under water. Immediately call a qualified service technician to inspect the heater and to replace any part of the control system and any gas control which has been under water.

E. Do not operate the pool heater unless the pool or spa is properly filled with water.

F. Before operating the appliance for the first time or after it has been off for an extended time, perform the following checklist:

1. Remove debris or other articles from inside the heater and the area around the heater and its exhaust vent. Make sure the ventilation openings are clear of debris or obstruction. For installations in an enclosed space, make sure openings for combustion and ventilation air are unobstructed.
2. Keep heater area clear and free from combustibles, flammable liquids and chemicals.
3. Check that all water connections are tight.
4. Water must be flowing through the heater during operation. Make sure that pool/spa is filled with water and have pump operating. Check that water flow is unobstructed from the appliance. When operating for the first time or after an extended shut-down, run filter pump for several minutes to clear all air from the system.

OPERATING INSTRUCTIONS

1. **STOP!** Read the safety information on (page 33).
2. Set both pool and spa thermostats to the lowest settings.
3. Turn off all electric power to the appliance.
4. This appliance does not have a pilot. It is equipped with an ignition device which automatically lights the burner. Do not try to light the burner by hand.
5. Remove the access door panels by unfastening the four screws located on each door, then lift up and out from the bottom of the panel to remove. If necessary, the screws may be used as handles, see Figure 25.
6. **Toggle-Style Valve:** Pull toggle toward you to turn gas off , see Figure 26.
7. Wait five (5) minutes to clear out any gas. If you then smell gas, **STOP!** Follow "B" in the "Before Start-up" instructions (page 33). If you don't smell gas, go to the next step.
8. Push the toggle switch away from you to switch the gas on.
9. Replace the Door Access Panels. All panels must be in place when operating the heater.
10. Set 3-way valves on inlet and outlet to pool or spa, as appropriate.
11. Turn on all electric power to the appliance.
12. Press either the POOL ON or SPA ON button switch on the operating control.
13. Set the thermostat to desired setting (***NOTICE:*** Setpoint must be above actual water temperature or burner will not fire). See "OPERATING the CONTROL PANEL".
14. The blower should come on immediately, and after about 20 seconds, the burner should fire. When operating for the first time, the burner may not fire on the first try because of air in the gas line. If it does not fire at first, push the OFF switch, wait five minutes, and again push the POOL or SPA ON switch. The burner should fire after about 20 seconds. You may have to repeat this until all of the air has cleared the gas line.

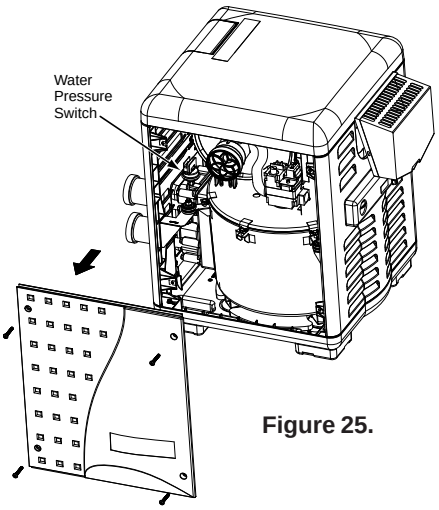

Figure 25.

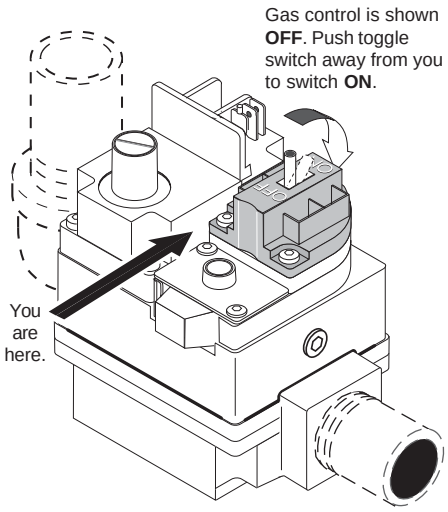

Figure 26.

15. The burner should fire until the pool/spa temperature reaches the desired temperature set on the thermostat. The blower will continue to run for about 45 seconds after the burner shuts off. If any of the safety interlocks should open during burner operation, the burner shuts off immediately, but the blower continues to run for about 45 seconds. Should overheating occur or the gas supply fail to shut off, turn off the manual gas control valve to the appliance.
16. If the appliance will not operate, follow the instructions below "TO TURN OFF GAS TO THE APPLIANCE", and call your service technician or gas supplier.

TO TURN OFF GAS TO APPLIANCE

1. Press the OFF button on operating control.
2. Switch off all electric power to the unit.
3. Remove the access door panels, see Figure 25.
4. **Toggle-Style Valve:** Pull toggle toward you to turn gas off, see Figure 26.
5. Replace the Access Door Panels.

SAFETY CONTROLS

AIR FLOW SWITCH (AFS)

The air flow switch, (see Figure 27), is a safety device used to insure that the combustion air blower (fan) is operating and has been designed to monitor the vacuum (negative) pressure within the blower housing. The air flow switch is factory set and is connected upstream of the ignition module. The ignition module does not operate unless the air pressure switch and all safety switches are closed.

Figure 27.

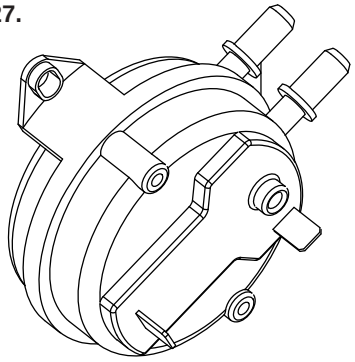

Air Flow Switch

WATER PRESSURE SWITCH

⚠WARNING

Hazardous pressure. Do not bypass the Water Pressure Switch or render it inoperable.

The water pressure switch, (see Figure 28). If the water flow is restricted, the water pressure switch may prevent the burner from firing and cause the "Service System" light to go on. If the light remains on after the filter has been serviced, have a qualified service technician check the system.

Figure 28.

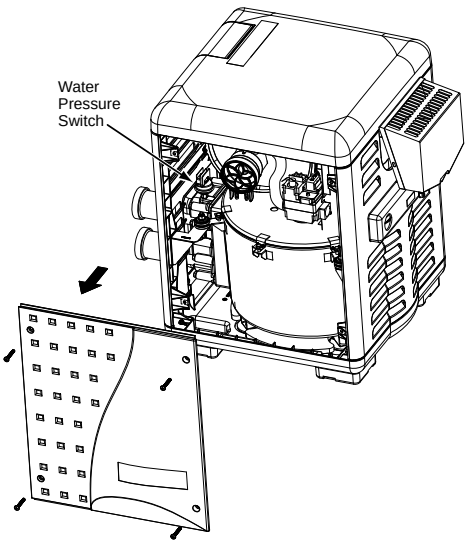

For deck-level heater installations, the Water Pressure Switch is factory set at 3.00 psi (20.6 kPa). ***NOTE:*** *See, Below Pool Level Installation Instructions on page 13*. If the pressure switch is one feet (.3M) below or above the pool water level, reset the switch so that it is open when the pump is off and closed when the pump is running. Turn the star-wheel on the switch clockwise (↷) to raise setting (heater below the pool) and counterclockwise (↶) to lower the setting (heater above the pool – see Figure 29. Test the switch after resetting.

NOTICE: When the heater is mounted more than five feet (1.5M) above or four feet (1.2M) below the deck level, a Pressure Switch is no longer adequate. A Flow Switch must be installed instead.

NOTICE: Heater operation with incorrect Pressure Switch setting may cause operation with no water flow. Operation of the heater without sufficient water flow may severely damage it.

HIGH LIMITS

A "High Limit", is a safety device that opens the electrical circuit and shuts off the heater based on a water temperature set point within the "High Limit Device". The MasterTemp heater series of heaters contains two (2) high limit devices which are located on the main inlet / outlet header.

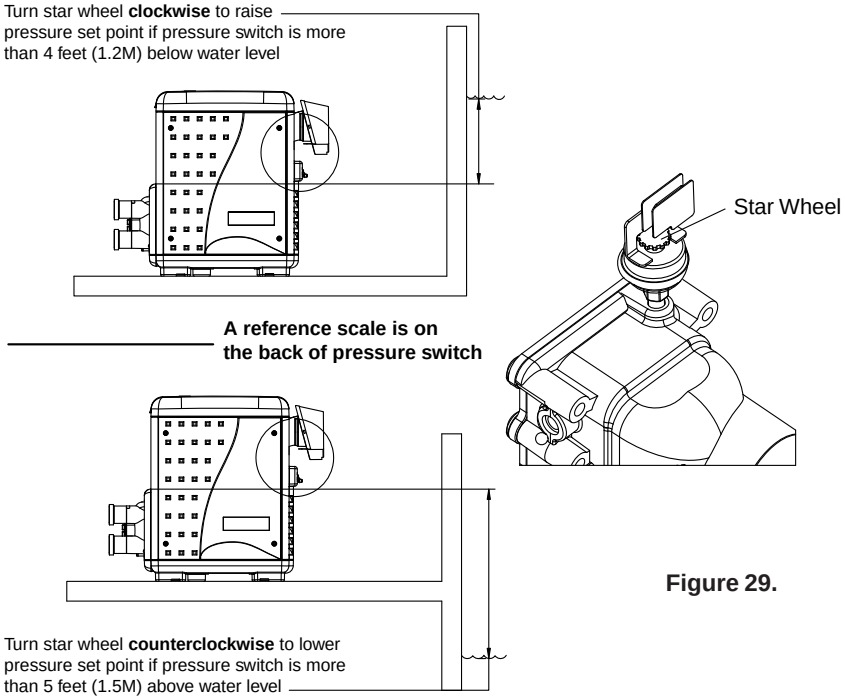

Figure 29.

SAFETY CONTROLS, (cont'd.)

OPERATION OF IGNITION MODULE

The Ignition Module, (see Figure 30), is microprocessor based and operates on 24VAC supplied by the transformer. The control utilizes a microprocessor to continually and safely monitor, analyze, and control the proper operation of the gas flame holder. The module with the presence of the flame sensor, using flame rectification, allows the heater to operate.

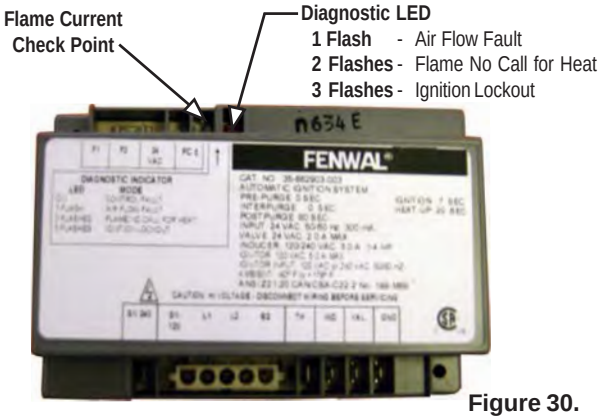

Figure 30.

OPERATING THE CONTROL PANEL

The five operating switches are:

POOL ON	Press this button to govern heater operation by the pool temperature setting.
SPA ON	Press this button to govern heater operation by the spa temperature setting.
HEATER OFF	Press this button to switch off the heater.
▲ TEMP	Press this button to raise the temperature setting.
▼ TEMP	Press this button to lower the temperature setting.

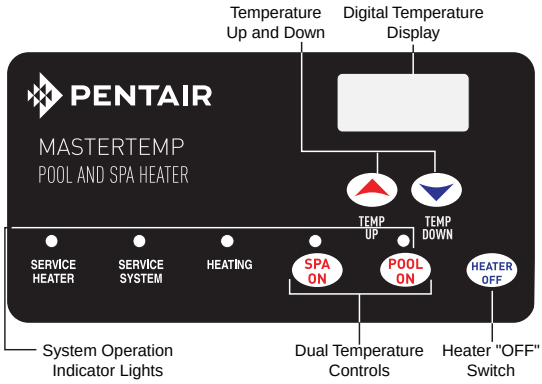

Figure 31.

To toggle the display between degrees Centigrade (°C) and degrees Fahrenheit (°F):

1. Turn the Operating Control OFF.
2. Press **▲TEMP** or **▼ TEMP** for 5 seconds. The display will flash once and change modes (°C to °F or vice versa).
3. Turn the Operating Control ON.

When either the **▲TEMP** or **▼ TEMP** buttons are depressed, the digital display will indicate the temperature setting. After five seconds, the display will return to the actual pool/spa temperature.

In addition to the digital temperature display, there are five indicator lights:

The **POOL ON** light indicates that the pool water temperature is governing operation of the heater.

The **SPA ON** light indicates that the spa water temperature is governing operation of the heater.

The **HEATING** light comes on and stays on when the burner is firing. This light should be on whenever the burner is on. It blinks when the heater is calling for heat but not firing. If this light is on but the burner fails to come on, one of the "service" lights should come on, indicating a fault in the system.

The **SERVICE SYSTEM** light indicates that there is insufficient water flow to the heater. If the pump is operating, this usually indicates that the filter and/or skimmers should be cleaned (some filters may require back-washing). If the light remains on after the filter/skimmers have been serviced, the system should be checked by a qualified service technician.

The **SERVICE HEATER** light indicates a fault in the heater or its controls. If this light comes on, shut down the heater (See "TO TURN OFF GAS TO THE APPLIANCE" on page 34), and have a qualified service technician check the system.

⚠WARNING

Risk of explosion or fire causing burns or death if safety interlocks are disabled. DO NOT attempt to operate heater when SERVICE HEATER light is on or if blower or burner will not start. Instead, follow instructions under "To Switch Off Gas to the Appliance," and call a qualified service technician to repair unit.

TEMPERATURE SETTING

The heater comes factory set at 78° F. for the pool mode and 100° F. for the spa mode. Using the up and down arrows, you can set the thermostats to a minimum temperature of 65° F., or a maximum of 104° F. If you desire to heat only one body of water, the thermostat is capable of an off mode. As an example, if you only wish to heat the spa and not the pool, simply depress and hold the pool down arrow, and the thermostat will lower its setting to 65° F. then go to an off mode.

MAXIMUM TEMPERATURE SET POINT

1. Unbolt and remove the door panels (see Figure 32).
2. Access the control panel board on the underside of the top cover. Locate the yellow button on the corner of the control board.
3. Push the **Max. Temp. Set Point** button on the back of the control board (see Figure 33).

The following sequence should happen:

A. The unit will come on and the **POOL ON** light will come on.

B. Press the ▲**TEMP** or ▼ **TEMP** pad (on TOP of the panel) to set maximum pool temperature.

C. Wait up to 30 seconds; the **POOL ON** light will go off and the **SPA ON** light will come on. To override the time delay, push the **Max. Temp. Set Point** button again.

D. Press the ▲**TEMP** or ▼ **TEMP** button on the control panel and set maximum spa temperature to 104°F (40°C) or less.

E. Wait up to 30 seconds; the **SPA ON** light will go off and the unit will shut down. To override the time delay, push the **Max. Temp. Set Point** button again.

4. Reinstall the access door panels.

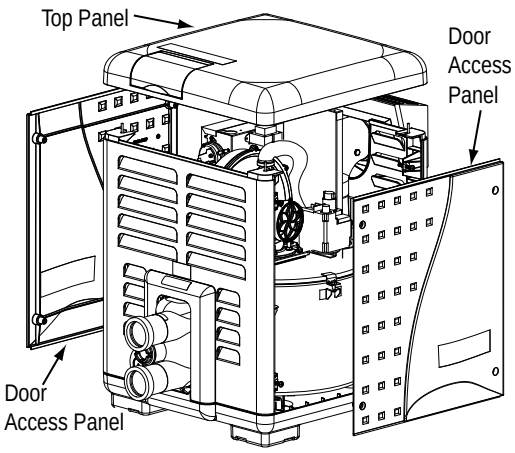

Figure 32.

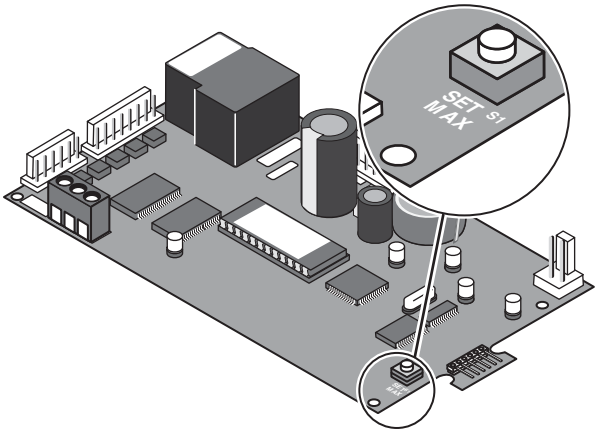

Figure 33.

Troubleshooting Instruction

Initial Troubleshooting

Only qualified, trained service technicians with appropriate test equipment should service the heater. Remember that all parts of the system affect heater operation. Before starting this troubleshooting procedure, make sure that the pump is running correctly, that there are no blockages in the system, that the valves are correctly set and that the time clock is correctly set and is running.

IMPORTANT! READ ME FIRST!

NOTICE: Installing the **black120 volt** plug in the control box and then connecting the heater to a **240 volt line will destroy the trans - former, control broad, and ignition control module, and will void the warranty.** If you install the red 240 volt plug and then connect the heater to a 120 volt line, the heater will not operate.

READ THE FOLLOWING CAREFULLY:

1. Check the line voltage to your heater. This heater will operate on either 120 Volts AC or 240 Volts AC.
2. Remove the covers and check the 12-pin plug in the back of the control box. The plug must match the voltage in the heater circuit.
3. If the 12-pin plug is not plugged into the back of the control box, select the correct plug from the bag in the control box and plug it in. The **BLACK** plug is for **120 volts,** the **RED** plug is for **240 volts.**

Start here for directions to specific Troubleshooting Chart

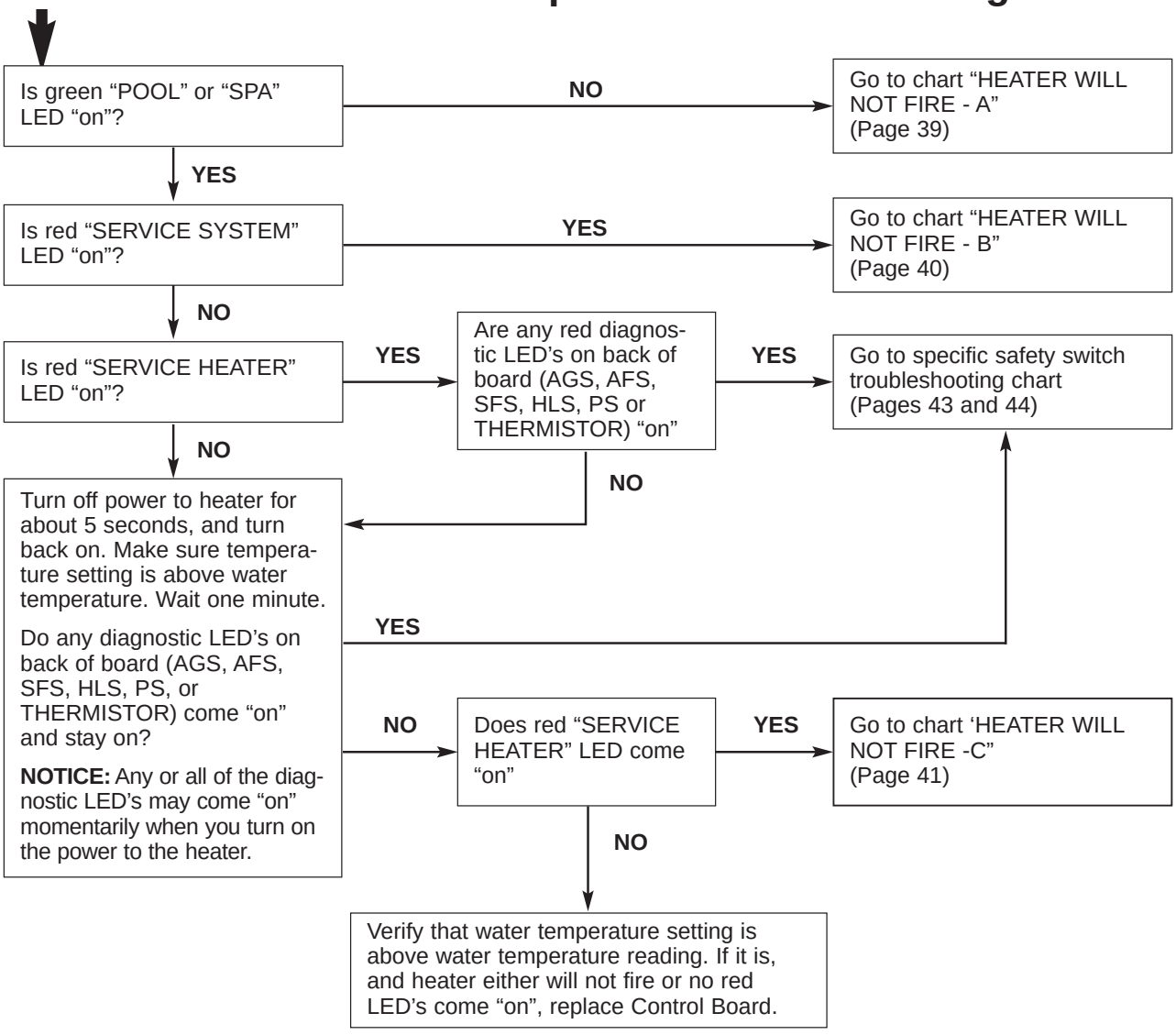

⚠ WARNING **Hazardous voltage. Can shock, burn or kill.** Disconnect power before servicing any components.

⚠ WARNING **Fire and Explosion hazard.** Do not jumper switch terminals to remedy a failed safety switch.

Heater Will Not Fire - A

Start

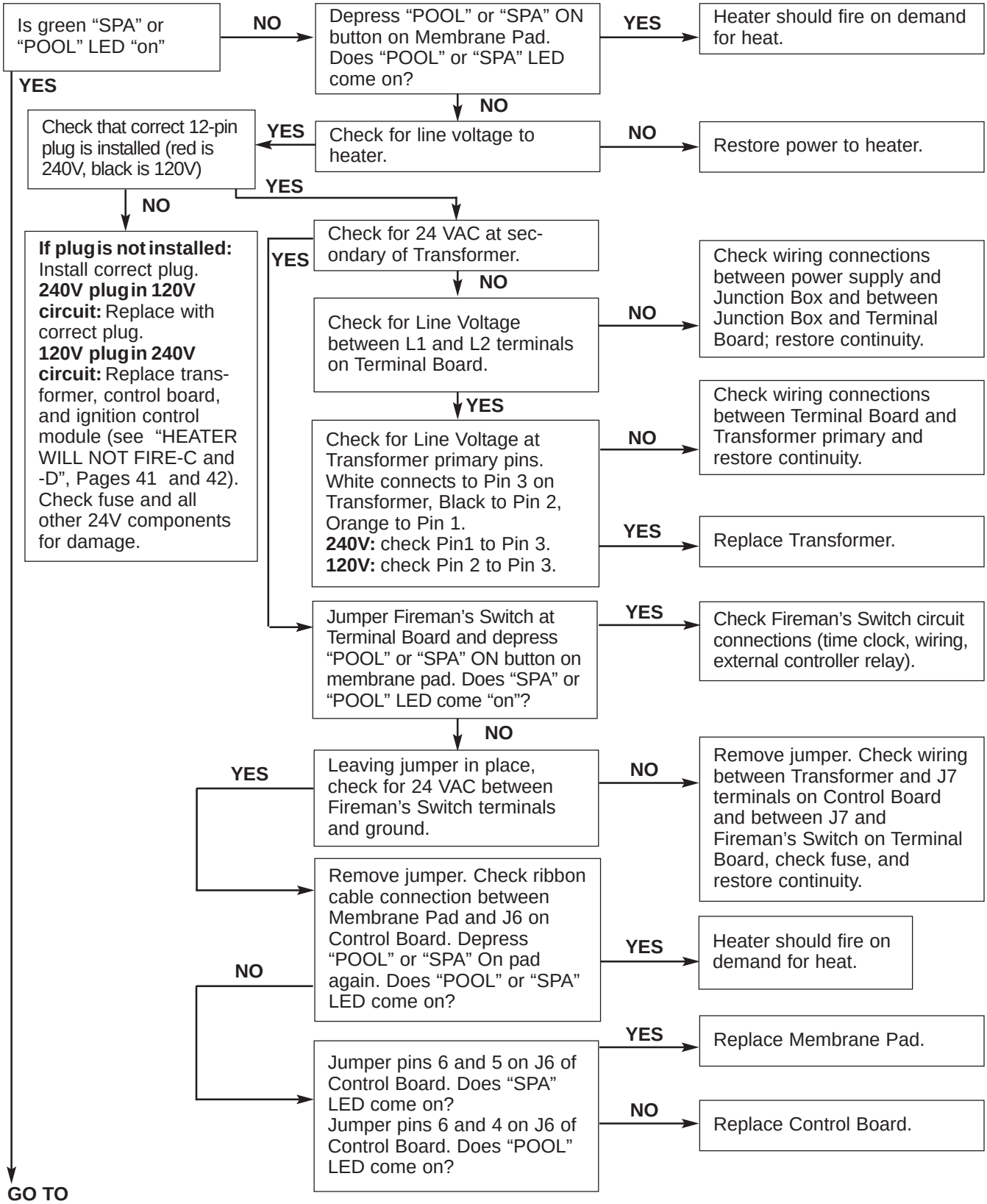

Heater Will Not Fire - B

Start

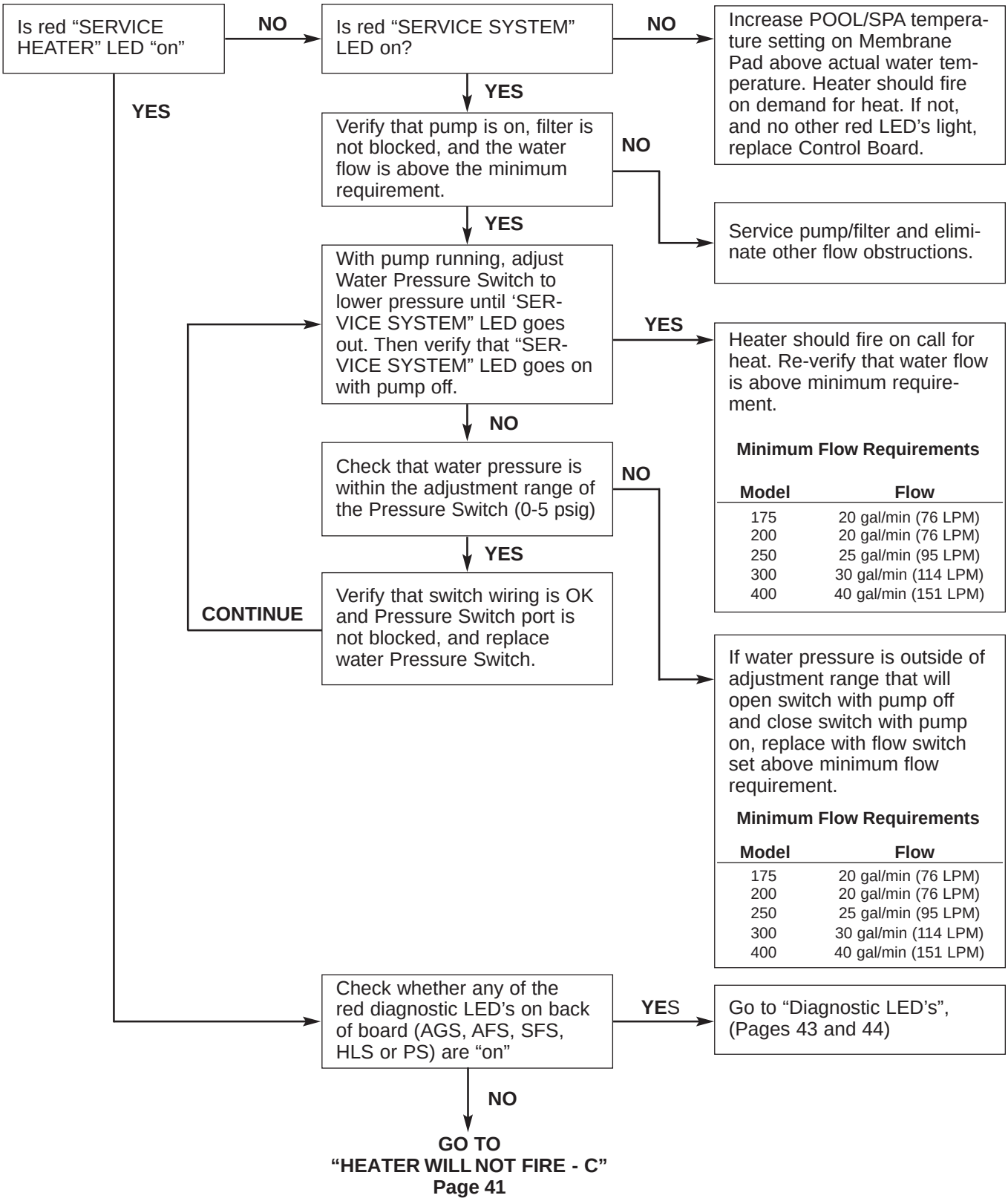

Heater Will Not Fire - C

Start

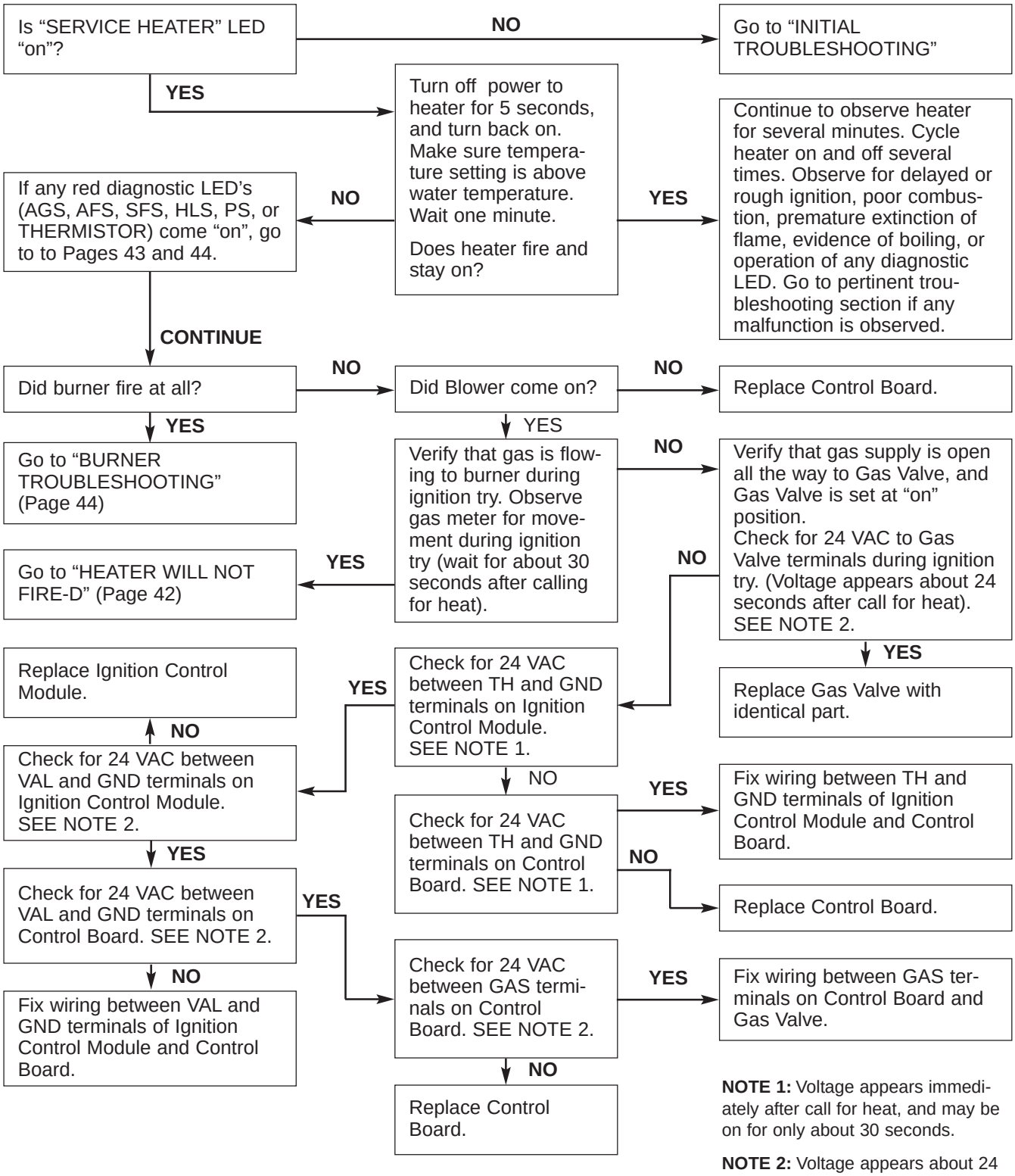

NOTE 1: Voltage appears immediately after call for heat, and may be on for only about 30 seconds.

NOTE 2: Voltage appears about 24 seconds after call for heat, and may be on for only about 7 seconds.

Heater Will Not Fire - D

IMPORTANT! READ ME FIRST!

IMPORTANT! READ ME FIRST!!

If your heater is correctly connected to **240 Volts AC,** the Ignition Control Module (ICM) will convert the 240VAC to an intermittent pulse to the ignitor. Digital meters don't read this type of signal well. (An analog meter will give a better reading than a digital meter). If the ICM is bad, your voltmeter will read either 0 VAC or 240 VAC. If your ICM is good, your meter will read some voltage between 0 and 240 VAC. Exactly what reading you get will depend on the meter, but with a good ICM, the reading won't be 0 VAC or 240 VAC, but somewhere in between.

Start

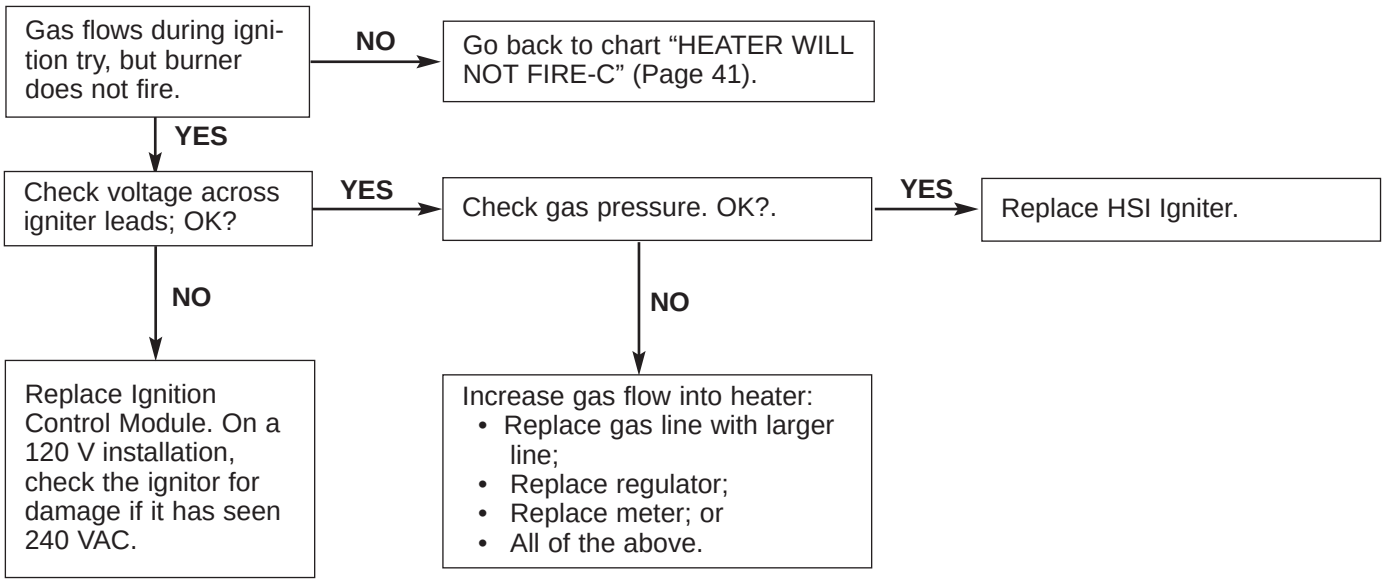

Diagnostic LED's: AGS, AFS, HLS, PS, THERMISTOR

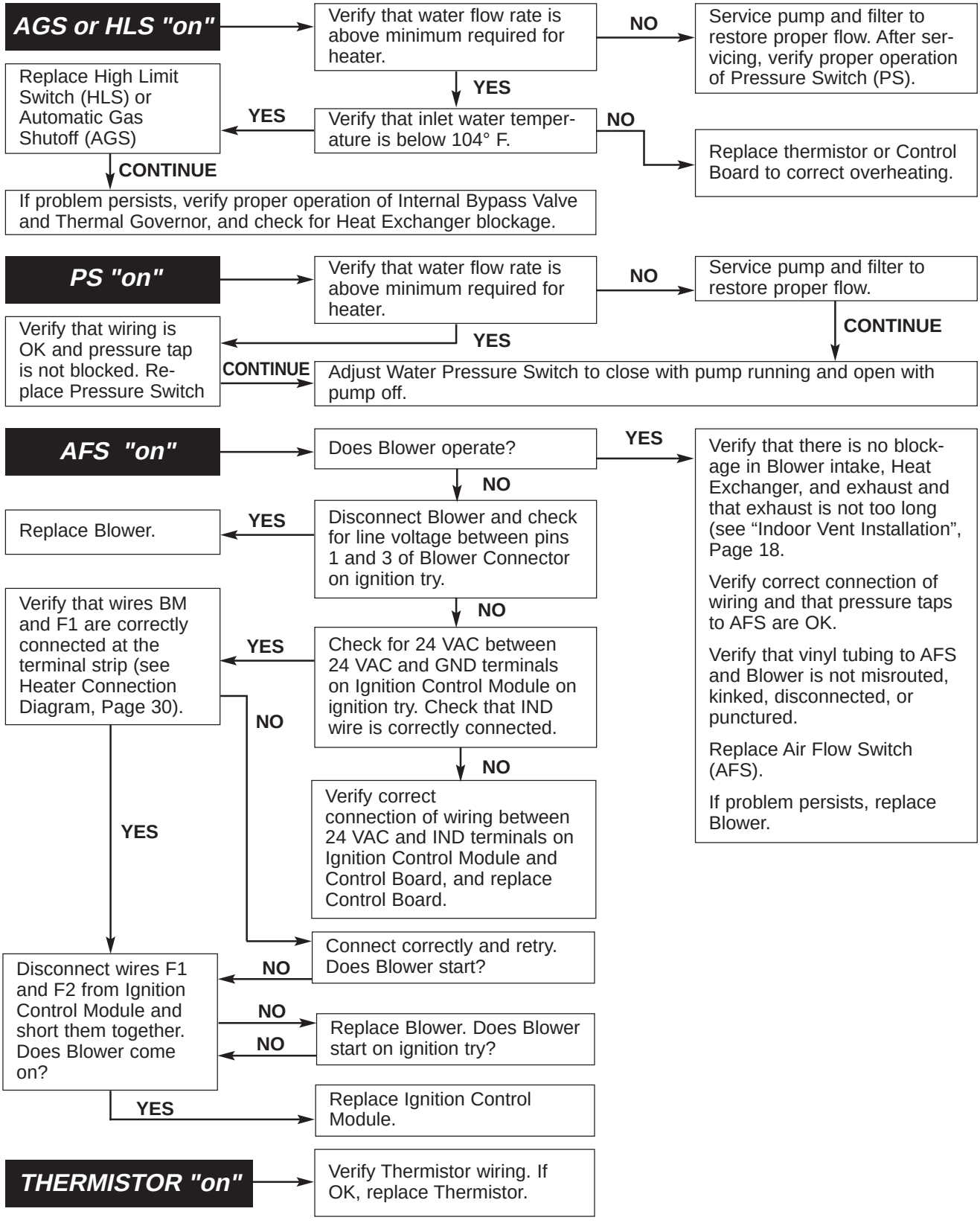

⚠ CAUTION Do not jumper a safety switch to remedy a failed switch.

NOTE: ES1 is a spare and should be jumpered.

Diagnostic LED's: SFS

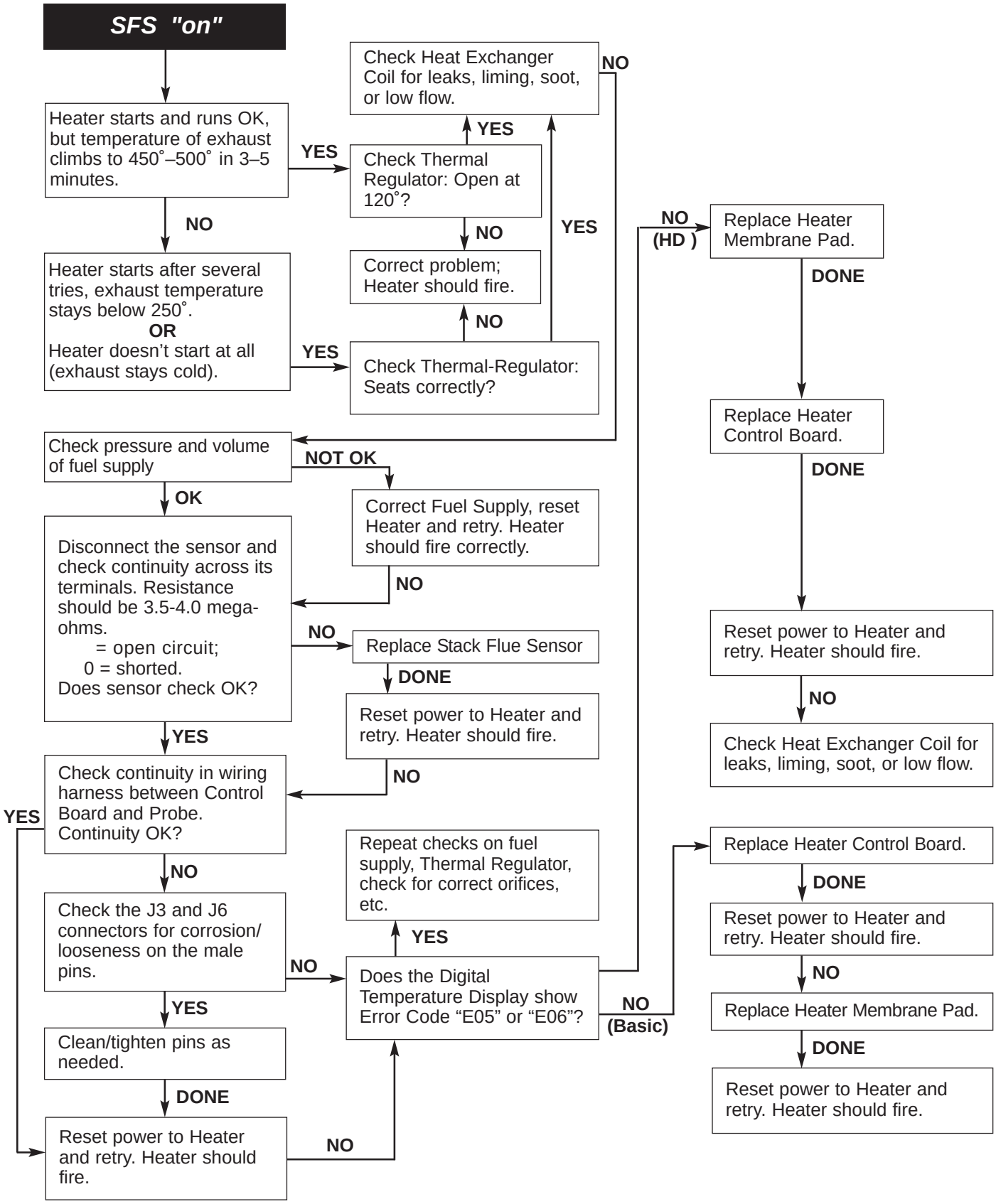

Burner Troubleshooting

SYMPTOM	CAUSE	REMEDY
Loud, high-pitched whine	Flame is too rich.	Verify pressure tap between gas valve and blower inlet. See page 15 and verify that the gas regulator setting is –0.2" (–0.5cm) wc. Contact a qualified technician or service agency to replace the gas orifice.
Flame is "fluttery." Exhaust may have acrid smell or burner may fail to stay lit.	Flame is too lean.	See page 16 and verify that the gas regulator setting is –0.2" (–0.5cm) wc. Contact a qualified technician or service agency to replace the gas orifice.
Burner pulsates or surges, especially on ignition.	Exhaust vent is too long.	Reduce length of exhaust vent and/or number of elbows.
Combustion appears normal, but flame does not stay lit.	Flame current is not being sensed.	Check for wet or damaged igniter with low resistance to ground. Replace with new igniter. Verify burner flameholder is properly grounded. Replace Ignition Control Module.

Heat Exchanger Troubleshooting

SYMPTOM	CAUSE	REMEDY
Boiling in heat exchanger. May be accompanied by "bumping" sounds.	Low water flow to heater.	Service pump and or filter.
	Heat exchanger plugged.	Service heat exchanger. Correct water chemistry.
	Bypass valve stuck open.	Service bypass valve.
	Thermal governor stuck closed.	Replace thermal governor.
Sweating.	Thermal governor failed.	Replace thermal governor.

Maintenance Instructions

CARE AND MAINTENANCE

⚠WARNING

Risk of fire or explosion from flammable vapors. Do not store gasoline, cleaning fluids, varnishes, paints, or other volatile flammable liquids near heater or in the same room with heater.

The following maintenance is recommended every six months and at the start of every swimming season:

1. Inspect the heater panels and venting system to make sure that there are no obstructions to the flow of ventilating air or burner exhaust. Check that room air intakes are open and clear of obstructions.
2. Keep the area in and around the heater clear and free from combustible materials, gasoline and other flammable vapors and corrosive liquids.
3. Test the operation of the pressure relief valve by lifting the valve lever (if installed).
4. Test for proper operation of the water pressure switch. (See “WATER PRESSURE SWITCH” (page 35) for testing instructions).
5. On enclosed installations with high-temperature Special Gas Vent systems, repeat the “Final Installation Check,” page 28. Check for evidence of joint leakage. Make sure that joints have not slipped partially or completely apart. Check pipe and fittings for cracks or breaks. The combustion air blower is permanently lubricated, and does not require periodic lubrication. The burner does not require maintenance or adjustment by the user. Call a qualified service technician if you suspect that the burner may require maintenance.

PRESSURE RELIEF VALVE (NOT FACTORY INSTALLED)

Canadian code requires and some U.S. local codes may require installation of a Pressure Relief Valve (PRV). Purchase separately and install (P/N 460925) a 3/4" pressure relief valve complying with the ANSI/ASME Boiler and Pressure Vessel Code, having a capacity equal to the Btu/hr rating of the heater.

The relief pressure of the valve MUST NOT EXCEED 50 PSI. The relief valve must be installed vertically. To install the valve, use a 3/4" x 3-1/2” brass nipple at the manifold and two (2) brass elbows and nipples (supplied), as shown in Figure 34. No valve is allowed to be placed between the manifold adapter and the relief valve. **Note: Be sure to use threaded seal tape (PTFE) or equivalent, on all treaded metal pipe connections.**

To avoid water damage or scalding from operation of the relief valve, install a drain pipe in the outlet of the pressure relief valve that will direct water discharging from the valve to a safe place for disposal. DO NOT install any reducing couplings or valves in the drain pipe. The drain pipe must be installed as shown in Fig. 34 to allow complete drainage from the valve and drain line.

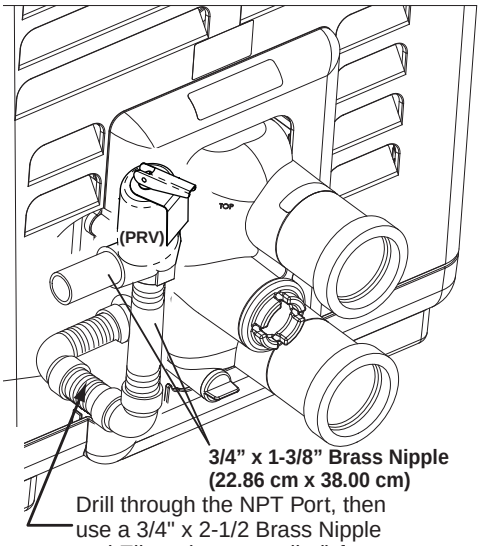

Figure 34.

Important! The relief valve should be tested at least once a year by lifting the valve lever.

⚠WARNING

Explosion hazard. Any heater installed with restrictive devices in the piping system downstream from the heater, (including check valves, isolation valves, flow nozzles, or therapeutic pool valving), must have a relief valve installed as described above.

AFTER START-UP

CHECKING WATER FLOW

⚠WARNING

Fire or flooding hazard. If the unit overheats and the burner fails to shut off, follow instructions under "To Turn Off Gas to the Appliance", page 34, and call a qualified service technician to repair unit.

After start-up, the outlet water pipe should feel slightly warmer than the inlet pipe. If it feels hot, or if you hear the water in the heater boiling, there may not be enough water flow to the appliance. Make sure that the filter is not plugged. If water temperature remains high but the unit continues to operate, turn off the appliance and call your service technician.

SPRING AND FALL OPERATION

If the pool is only used occasionally, lower the pool thermostat to 68° F (20° C) and leave the heater on. This will keep the pool and the surrounding ground warm enough so that the heater should restore the pool to a comfortable temperature within about one day.

WINTER OPERATION

⚠CAUTION

- **Operating this heater continuously at water temperatures below 68° F. (20° C) will cause harmful condensation and will damage the heater and void the warranty.**
- **If the heater has been drained for freezing condition, do NOT turn "ON" until the system is circulating water.**
- **Water trapped in the heat exchanger can result in freeze damage to the exchanger or headers. Freeze damage is specifically not covered by the warranty.**
- **When starting the heater for the swimming season with a water temperature below 50° F (10° C), the heater may be used to heat the water; however, make sure that the heater operates continuously until the water temperature reaches the heater's minimum setting of 68° F (20° C). During cold weather, if there is no danger of freezing, operate the filter pump continuously even if the heater is not operating. If air temperatures are expected to drop below freezing (32° F/0° C), shut down the heater and winterize it.**

For outdoor heaters in freezing climates, shut the heater down and drain it for winter as follows:

1. Turn off electrical supply to the heater and pump.
2. Close main gas control valve and manual gas valve (located outside the heater). Turn switch on heater gas valve to OFF.
3. In northern climates where they may be required, open drain cock located on the bottom of the manifold adapter, and drain the heat exchanger and manifold adapter completely. If heater is below pool water level, be sure to close isolation valves to prevent draining the pool (isolation valves are not required and should not be used on heaters installed above pool water level except when needed for winterizing valves). Assist the draining by blowing out the heat exchanger through the pressure switch fitting with low pressure compressed air (less than 5 PSI or 35 kPa).

⚠WARNING

Explosion hazard. Purging the system with compressed air can cause components to explode, with risk of severe injury or death to anyone nearby. Use only a low pressure (below 5 PSI or 35 kPa), high volume blower when air purging the heater, pump, filter, or piping.

4. Remove the Water Pressure Switch. Plug the port in the manifold to prevent bugs and dirt from getting into the manifold.
5. Drain the plastic inlet/outlet manifold through the outlet pipe. If the pipe does not drain naturally to the pool, install a drain cock in the outlet pipe to drain the manifold.
6. Cover air inlet grate with a plastic bag to prevent bugs, leaves, etc., from getting into the heater.

NOTICE: Water trapped in the heater can cause freeze damage. Allowing the heater to freeze voids the warranty.

To return the heater to service after winterizing:

1. Close drain cock and fittings.
2. Before starting the heater, circulate water through the heater for several minutes until all air noises stop. See also "BEFORE START-UP" (page 33) and "CARE AND MAINTENANCE" (page 46).

(See additional notes under Important Notices in Introduction.)

MAINTAINING POOL TEMPERATURE

To maintain pool temperature, make sure that the heater switch and valving are reset to pool settings after using the spa.

ENERGY SAVING TIPS

1. Keep the pool or spa covered when not in use. This will reduce heating costs, reduce water evaporation, conserve chemicals and reduce load on the filtering system.
2. Reduce pool thermostat to 78° F (25° C) or lower; reduce spa temperature to 100° F (38° C). This is accepted as being the most healthy temperature for swimming by the American Red Cross.
3. Use a time clock to start the filter pump at 6 a.m. or later. The swimming pool loses less heat after daybreak.
4. For pools used only on weekends, lower the thermostat setting by 10° F to 15° F (5° C to 8° C) during the week to reduce heat loss. A properly sized heater will restore normal temperature within one day.
5. Turn the heater off when the pool will not be used for an extended period.
6. Follow a regular program of preventive maintenance for the heater each new swimming season. Check operation of the heater and its controls.

CHEMICAL BALANCE

POOL AND SPA WATER

Your pool heater was designed specifically for your spa or pool and will give you many years of trouble-free service, provided you keep your water chemistry in proper condition.

Water chemistry should follow good swimming pool water chemistry practices. When using a chlorinator, install it down stream from the heater and at a lower level than the heater outlet. Install a corrosion resistant positive seal “Check Valve”, (P/N R172288), between the heater and the chlorinator to prevent concentrated chemicals from back-siphoning into the heater. Back-siphoning is most likely to occur when the pump stops, creating a pressure-suction differential. Do NOT sanitize the pool by putting chlorine tablets or sticks into the skimmer(s). When the pump is off, this will cause a high concentration of chlorine to enter the heater, which could cause corrosion damage to the heat exchanger.

Three major items that can cause problems with your pool heater are: improper pH, disinfectant residual, and total alkalinity. These items, if not kept properly balanced, can shorten the life of the heater and cause permanent damage.

⚠CAUTION

Heat exchanger damage resulting from chemical imbalance is not covered by the warranty.

WHAT A DISINFECTANT DOES

Two pool guests you do not want are algae and bacteria. To get rid of them and make pool water sanitary for swimming - as well as to improve the water's taste, odor and clarity - some sort of disinfectant must be used.

Chlorine and bromine are universally approved by health authorities and are accepted disinfecting agents for bacteria control.

WHAT IS A DISINFECTANT RESIDUAL?

When you add chlorine or bromine to the pool water, a portion of the disinfectant will be consumed in the process of destroying bacteria, algae and other oxidizable materials. The disinfectant remaining is called chlorine residual or bromine residual. You can determine the disinfectant residual of your pool water with a reliable test kit, available from your local pool supply store.

You must maintain a disinfectant residual level adequate enough to assure a continuous kill of bacteria or virus introduced into pool water by swimmers, through the air, from dust, rain or other sources.

CHEMICAL BALANCE, (cont'd.)

It is wise to test pool water regularly. Never allow chlorine residual to drop below 0.6 ppm (parts per million). The minimum level for effective chlorine or bromine residual is 1.4 ppm.

pH - The term pH refers to the acid/alkaline balance of water expressed on a numerical scale from 0 to 14. A test kit for measuring pH balance of your pool water is available from your local pool supply store; see Table 9.

Muriatic Acid has a pH of about 0. Pure water is 7 (neutral). Weak Lye solution have a pH of 13-14.

RULE: 7.4 to 7.6 is a desirable pH range. It is essential to maintain correct pH, see Table 9.

If pH becomes too high (over alkaline), it has these effects:

1. Greatly lowers the ability of chlorine to destroy bacteria and algae.
2. Water becomes cloudy.
3. There is more danger of scale formation on the plaster or in the heat exchanger tubing.
4. Filter elements may become blocked.

If pH is too low (over acid) the following conditions may occur:

1. Excessive eye burn or skin irritation.
2. Etching of the plaster.
3. Corrosion of metal fixtures in the filtration and recirculation system, which may create brown, blue, green, or sometimes almost black stains on the plaster.
4. Corrosion of copper tubes in the heater, which may cause leaks.
5. If you have a sand and gravel filter, the alum used as a filter aid may dissolve and pass through the filter.

CAUTION: Do not test for pH when the chlorine residual is 3.0 ppm or higher, or bromine residual is 6.0 ppm or higher. See your local pool supply store for help in properly balancing your water chemistry.

RULE: Chemicals that are acid lower pH. Chemicals that are alkaline raise pH.

ALKALINITY High or Low:

"Total alkalinity" is a measurement of the total amount of alkaline chemicals in the water, and control pH to a great degree. (It is not the same as pH which refers merely to the relative alkalinity/acidity balance.) Your pool water's total alkalinity should be 100 - 140 ppm to permit easier pH control.

A total alkalinity test is simple to perform with a reliable test kit. You will need to test about once a week and make proper adjustments until alkalinity is in the proper range. Then, test only once every month or so to be sure it is being maintained. See your local pool dealer for help in properly balancing the water chemistry.

WATER CHEMISTRY PARAMETERS

Table 9.

Disinfectant levels	**Minimum**	**Ideal**	**Maximum**
Free Chlorine, ppm	1.0	2.0-4.0	5.0**
Combined Chlorine, ppm	None	None	0.2
Bromine, ppm	2.0	4-6	10.0
Other Sanitizers	Levels not established. Consult local health department before use.		
Chemical Values			
pH	7.2	7.4-7.6	7.8**
Total Alkalinity (Buffering), ppm as CaCO3	60	80-100	180
Salt ppm	2000	3200	5000**
Total Dissolved Solids, ppm	N/A	N/A	1,500 ppm > TDS at startup*
Calcium Hardness, ppm, as CaCO3	150	200-400	500-1,000
Heavy Metals	None	None	None
Biological Values			
Algae	None	None	None
Bacteria	None	None	Refer to Local Code

*Start-up TDS includes source water TDS and any other inorganic salt added at start-up.
NOTE (**): Failure to adhere to the listed water chemistry parameters may result in premature failure of the heat exchanger and will **void the heater warranty**.

MASTERTEMP HEATER REPLACEMENT PARTS

For complete
Electrical System
parts breakdown
(Key Nos. 1 through 4),
See Page 53

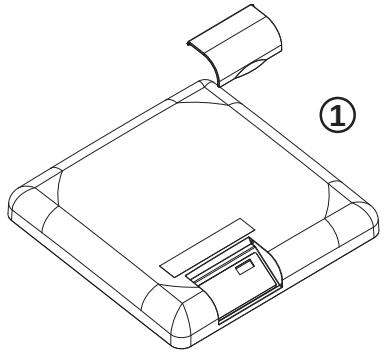

For complete
Burner System
parts breakdown
(Key Nos. 5 through 7),
See Page 51

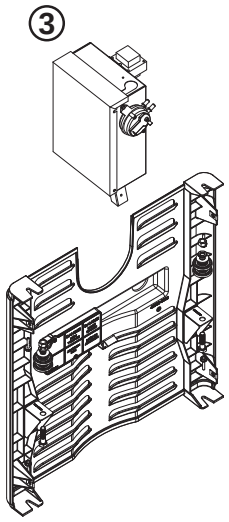

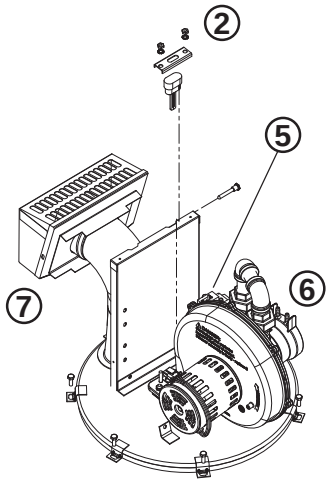

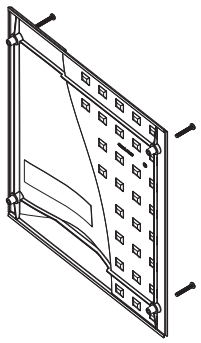

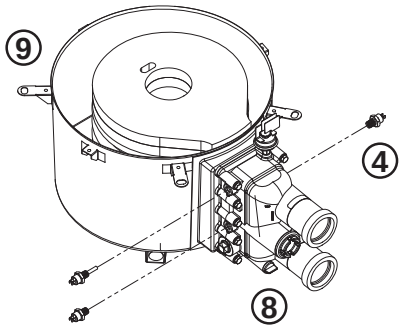

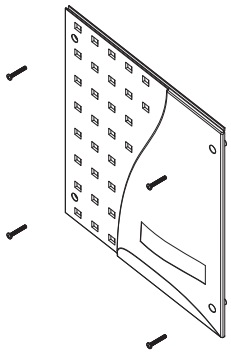

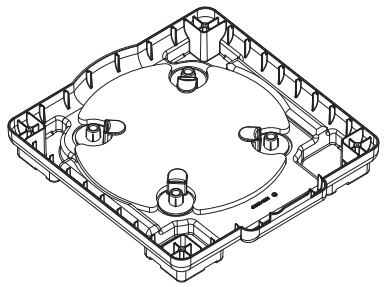

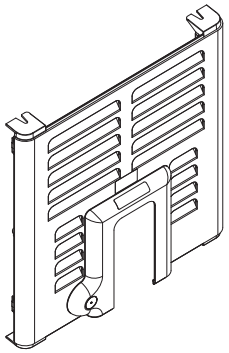

For complete
Water System
parts breakdown
(Key Nos. 8 through 9),
see Page 52

Repair Parts are available from your Pentair dealer.
If your dealer cannot supply you, call Customer Support at 1-800-831-7133.

MASTERTEMP HEATER REPLACEMENT PARTS

For Heater mounting bolts and clamps, purchase separately Bolt Down Bracket Kit, Part No. 460738.

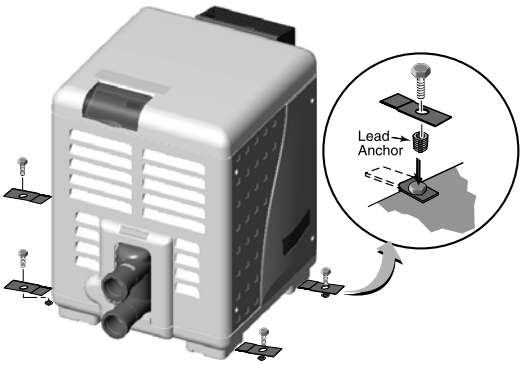

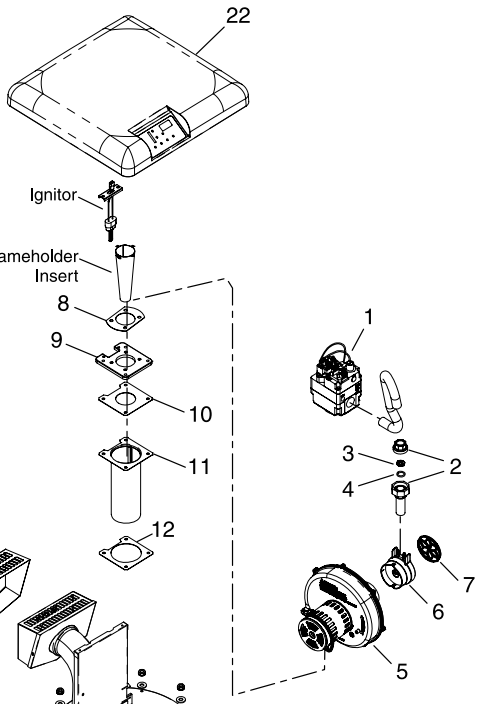

CLAMP LID TUB DESIGN

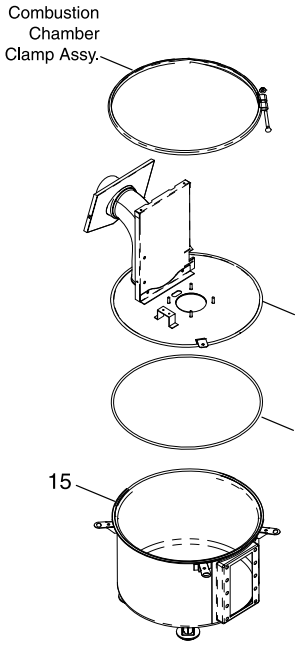

For heaters manufactured between 1/12/2009 and 10/31/2013 (clamp lid tub design)
Note: Kits also include Clamp Assembly, O-Ring and Silicon Tube (see page 52)

MASTERTEMP HEATER REPLACEMENT PARTS

REPAIR PARTS – BURNER SYSTEM

Key No.	Part Description	Qty.	Model 175NA 175LP	200NA 200LP	250NA 250LP	300NA 300LP	400NA 400LP
1	Combination Gas Control Valve Kit	1	42001-0051S	42001-0051S	42001-0051S	42001-0051S	42001-0051S
2	3/4" Union	2	38404-4097S	38404-4097S	38404-4097S	38404-4097S	38404-4097S
3	Gas Orifice	1					
4	Gas Orifice O-Ring	1					
•	Gas Orifice Kit – NG (Incl. Key Nos. 3 and 4)†		460794	77707-0431	460739	460753	77707-0411
•	Gas Orifice Kit – Propane (Incl. Key Nos. 3 and 4)†		460795	77707-0461	460740	460754	77707-0441
•	NG to Propane Conversion Kit (Incl. Key Nos. 3 and 4)†		460794	77707-1461	460741	460755	77707-1441
•	Propane to NG Conversion Kit (Incl. Key Nos. 3 and 4)†		460795	77707-1431	460742	460756	77707-1411
5	Air Blower Kit						
	Natural Gas Units	1	77707-0251	77707-0251	460743	460757	77707-0253
	Propane Units	1	77707-0254	77707-0254	460744	460758	77707-0256
•	Air Orifice Kit (Includes Key Nos. 6 and 7)	1	460798	77707-0111	460745	460759	77707-0113
6	Air Orifice	1					
7	Air Orifice Grill	1	42001-0114S	42001-0114S	42001-0114S	42001-0114S	42001-0114S
•	Blower/Adapter Plate Gasket Kit (Includes Key Nos. 8, 9, 10, 12)	1	77707-0011	77707-0011	77707-0011	77707-0011	77707-0011
•	Flameholder Kit (Includes Key Nos. 10, 11, 12, 13 and on 300 & 400 models only - Flameholder Insert)	1	77707-0202	77707-0202	460746	77707-0203	77707-0204
8	Blower/Adapter Plate Gasket	1					
9	Blower Adapter Plate	1					
10	Flameholder/Adapter Plate Gasket	1					
11	Flameholder Assembly	1					
12	Flameholder/Combustion Chamber Gasket*	1					
13	Flameholder Insulation Cap	1					
•	Flameholder Insert	1					
14	Condensate Evaporator Plate	1					
15	One Piece Metal Chamber/Combustion Chamber Assembly	1	474095♦ 474957♦♦ 42001-0200S♦♦♦	474095♦ 474957♦♦ 42001-0200S♦♦♦	474095♦ 474957♦♦ 42001-0200S♦♦♦	474095♦ 474957♦♦ 42001-0200S♦♦♦	474095♦ 474957♦♦ 42001-0200S♦♦♦
•	Insulation Kit (Includes Key No.13,14,16,17,18,19)	1	77707-0008	77707-0008	77707-0008	77707-0008	77707-0008
16	Bottom Outer Insulation Blanket*	1					
17	1" Bottom Inner Insulation	1					
18	1" Top Insulation	1					
19	Top Outer Insulation Blanket*	1					
•	Lower Enclosure Insulation	1	42001-0074S	42001-0074S	42001-0074S	42001-0074S	42001-0074S
20	One Piece Metal Elbow/Combustion Chamber Cover Assembly	1	474094♦ 474958♦♦ 42001-0214S♦♦♦	474094♦ 474958♦♦ 42001-0214S♦♦♦	474094♦ 474958♦♦ 42001-0214S♦♦♦	474094♦ 474958♦♦ 42001-0214S♦♦♦	474094♦ 474958♦♦ 42001-0214S♦♦♦
•	Combustion Chamber O-Ring Kit	1	474201♦ 474952♦♦	474201♦ 474952♦♦	474201♦ 474952♦♦	474201♦ 474952♦♦	474201♦ 474952♦♦
21	Metal Vent Cover	1	42002-0005S	42002-0005S	42002-0005S	42002-0005S	42002-0005S
	Cover Assembly	1	42001-0214S	42001-0214S	42001-0214S	42001-0214S	42001-0214S
22	Heater Top	1	42002-0034Z	42002-0034Z	42002-0034Z	42002-0034Z	42002-0034Z
23	Side Panel {Service Panel}	1	42002-0039	42002-0039	42002-0039	42002-0039	42002-0039
24	Side Panel {Manifold}	1	42002-0033	42002-0033	42002-0033	42002-0033	42002-0033
25	Heater Bottom	1	42002-0031	42002-0031	42002-0031	42002-0031	42002-0031
26	Side Panel {Flue Stack}	1	42002-0032	42002-0032	42002-0032	42002-0032	42002-0032
27	J-Box Cover	1	42002-0041	42002-0041	42002-0041	42002-0041	42002-0041
28	Screw Kit, Panel	1	474292	474292	474292	474292	474292
•	Combustion Air Intake Duct Connection Kit	1	461031	461031	461031	461031	461031

* Not available separately.

† Not included with heater. Order separately.

♦ For heaters manufactured between 1/12/2009 and 10/31/2013 (clamp lid tub design)
Note: Kits also include Clamp Assembly, O-Ring and Silicon Tube.

♦♦ For heater manufactured AFTER 10/31/2013 (New 9-bolt lid tub design)

♦♦♦ For heater manufactured BEFORE 1/12/2009

MASTERTEMP HEATER REPLACEMENT PARTS

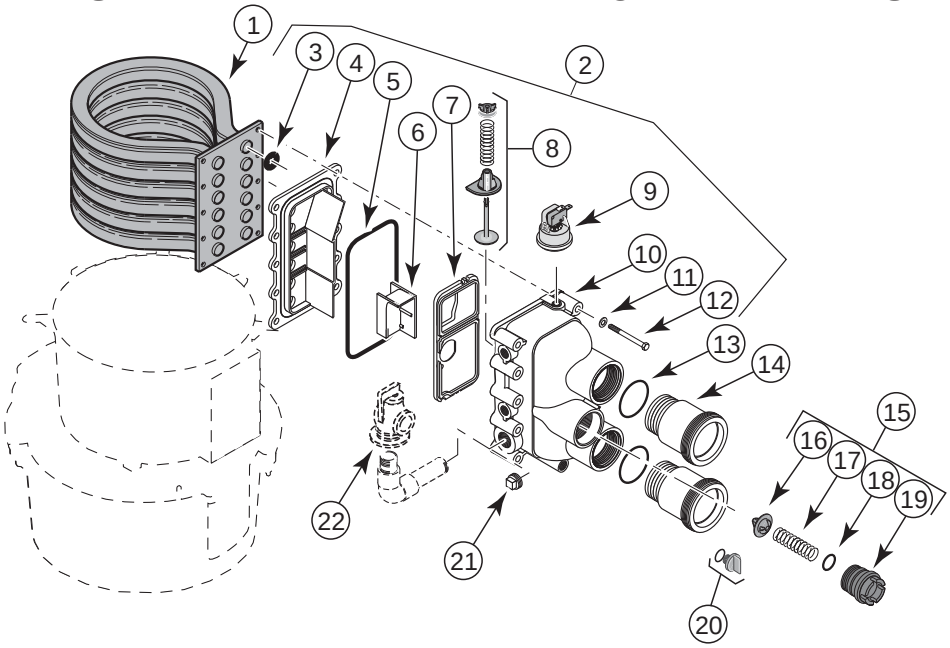

REPAIR PARTS – WATER SYSTEM

Key No.	Part Description	Qty.	Model 175NA - 200NA 175LP - 200LP	250NA 250LP	300NA 300LP	400NA 400LP
1	Tube Sheet Coil Assembly Kit **(NA, LP Series)**					
	(Includes Key No.3)	1	77707-0232 474058♦	460747 474059♦	77707-0233 474060♦	77707-0234 474061♦
1	Tube Sheet Coil Assembly Kit **(NA - HD Series)**					
	(Includes Key No.3)	1	– –	473710 474063♦	– –	77707-0244 474065♦
1	Tube Sheet Coil / Combustion Chamber Kit **(ASME SERIES)**					
	Bronze Header - Key Nos. 3-12, 15, 20-22,	1	– 472732Z	460941 474097♦ 474955♦♦	– – –	460940 474096♦ 474956♦♦
1	Tube Sheet Coil / Combustion Chamber Kit **(HD ASME SERIES)**		–	474349, 474954♦♦	–	474350, 474953♦♦
2	Manifold Kit (Includes Key Nos. 3-14, 21, &					
	Key Nos. 5-7 in “Electrical System”, Page 53	1	77707-0014	460748	77707-0015	77707-0016
•	Basic Manifold Kit (includes Key No. 3,5,10-14)		474200	474200	474200	474200
3	Coil/Tubesheet Sealing O-Ring Kit	( )	77707-0117(6)	460749(8)	77707-0118(10)	77707-0119(12)
4	Manifold Bottom Plate	1				
5	Manifold O-Ring	1				
•	O-Ring Kit (Incl. Key Nos. 3, 5)	1	77707-0120	77707-0120	77707-0120	77707-0120
6	Manifold Insert*	1				
7	Manifold Baffle Plate	1				
8	Manifold Bypass Valve	1	77707-0001	77707-0001	77707-0001	77707-0001
9	Water Pressure Switch	1	42001-0060S	42001-0060S	42001-0060S	42001-0060S
10	Manifold	1				
11	5/16" Washer, S.S.	10				
12	5/16x18x2-3/4" Hex Cap screw	10				
13	Connector Tube O-Ring	2	U9-226	U9-226	U9-226	U9-226
14	Connector Tube Kit (Includes 1 Connector Tube					
	and 1 O-Ring)	2	77707-0017	77707-0017	77707-0017	77707-0017
15	Thermal Regulator Kit					
	(Incl. Key No. 16, 17, 18, 19 and Spring Clip)	1	77707-0010	77707-0010	77707-0010	77707-0010
16	Thermal Regulator (Includes Spring Clip)	1	38000-0007S	38000-0007S	38000-0007S	38000-0007S
17	Thermal Regulator Spring	1				
18	Thermal Regulator Cap O-Ring	1	35505-1313	35505-1313	35505-1313	35505-1313
•	Thermal Regulator Spring Clip	1				
19	Thermal Regulator Cap	1				
20	Drain Plug	1	U178-920P	U178-920P	U178-920P	U178-920P
21	3/4" Pipe Plug	1	U78-60ZPS	U78-60ZPS	U78-60ZPS	U78-60ZPS
22	Pressure Relief Valve (Recommended -					
	(Purchase Separately)	1	38674-0719	38674-0719	38674-0719	38674-0719

* Not available separately. • Not illustrated.

♦ For heaters manufactured between 1/12/2009 and 10/31/2013 (clamp lid tub design) - Note: Kits also include Clamp Assembly, O-Ring and Silicon Tube.

♦♦ For ASME heater manufactured AFTER 10/31/2013 (New 9-bolt lid tub design)

♦♦♦ For heater manufactured BEFORE 1/12/2009

MASTERTEMP HEATER REPLACEMENT PARTS

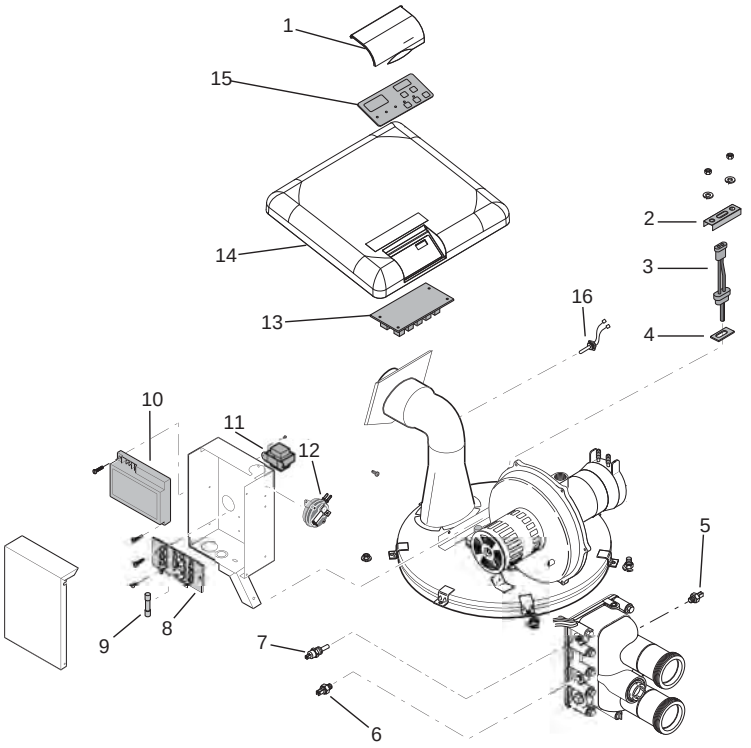

REPAIR PARTS – ELECTRICAL SYSTEM

Key No.	Part Description	Qty.	Model 175NA - 200NA 175LP - 200LP	250NA 250LP	300NA 300LP	400NA 400LP
1	Heater Display Cover	1	42002-0035	42002-0035	42002-0035	42002-0035
2	Igniter Bracket	1	42001-0030S	42001-0030S	42001-0030S	42001-0030S
3	Igniter/Igniter Gasket Kit Incl. Key Nos. 3 and 4)	1	77707-0054	77707-0054	77707-0054	77707-0054
4	Igniter Gasket	1	42001-0066S	42001-0066S	42001-0066S	42001-0066S
5	Automatic Gas Shutoff Switch (AGS)	1	42002-0025S	42002-0025S	42002-0025S	42002-0025S
6	High Limit Switch	1	42001-0063S	42001-0063S	42001-0063S	42001-0063S
7	Thermistor	1	42001-0053S	42001-0053S	42001-0053S	42001-0053S
8	Terminal Board	1	42001-0056S	42001-0056S	42001-0056S	42001-0056S
9	Fireman's Switch Fuse (1.25A, 1-1/4")	1	32850-0099	32850-0099	32850-0099	32850-0099
10	Ignition Control Module	1	42001-0052S	42001-0052S	42001-0052S	42001-0052S
11	Transformer, 120/240V	1	42001-0107S	42001-0107S	42001-0107S	42001-0107S
12	Air Flow Switch	1	42001-0061S	42001-0061S	42001-0061S	42001-0061S
13	Control Board Kit (NA, LP Series)	1	42002-0007S	42002-0007S	42002-0007S	42002-0007S
•	Heater Wiring Harness - 120/240V	1	42001-0104S	42001-0104S	42001-0104S	42001-0104S
•	120/240 Volt Plug Kit	1	42001-0105S	42001-0105S	42001-0105S	42001-0105S
14	Heater, Top	1	42002-0034Z	42002-0034Z	42002-0034Z	42002-0034Z
15	Membrane Pad (NA, LP Series)	1	472610Z	472610Z	472610Z	472610Z
16	Stack Flue Sensor	1	42002-0024S	42002-0024S	42002-0024S	42002-0024S

• Not available separately.

* Kit parts not available separately.



1620 HAWKINS AVE., SANFORD, NC 27330 • (919) 566-8000
10951 WEST LOS ANGELES AVE., MOORPARK, CA 93021 • (805) 553-5000
www.pentairpool.com

All Pentair trademarks and logos are owned by Pentair or by one of its global affiliates. Pentair Aquatic Systems™, MasterTemp®, IntelliTouch®, EasyTouch®, are trademarks and/or registered trademarks of Pentair Water Pool and Spa, Inc. and/or its affiliated companies in the United States and/ or other countries. Unless expressly noted, names and brands of third parties that may be used in this document are not used to indicate an affiliation or endorsement between the owners of these names and brands and Pentair Water Pool and Spa, Inc. Those names and brands may be the trademarks or registered trademarks of those third parties. Because we are continuously improving our products and services, Pentair reserves the right to change specifications without prior notice. Pentair is an equal opportunity employer.

© 2015 Pentair Water Pool and Spa, Inc. All rights reserved. This document is subject to change without notice.



P/N 472592 REV. M 1/2015