SERENA

ABOVE GROUND POOL
ROUND INSTALLATION MANUAL

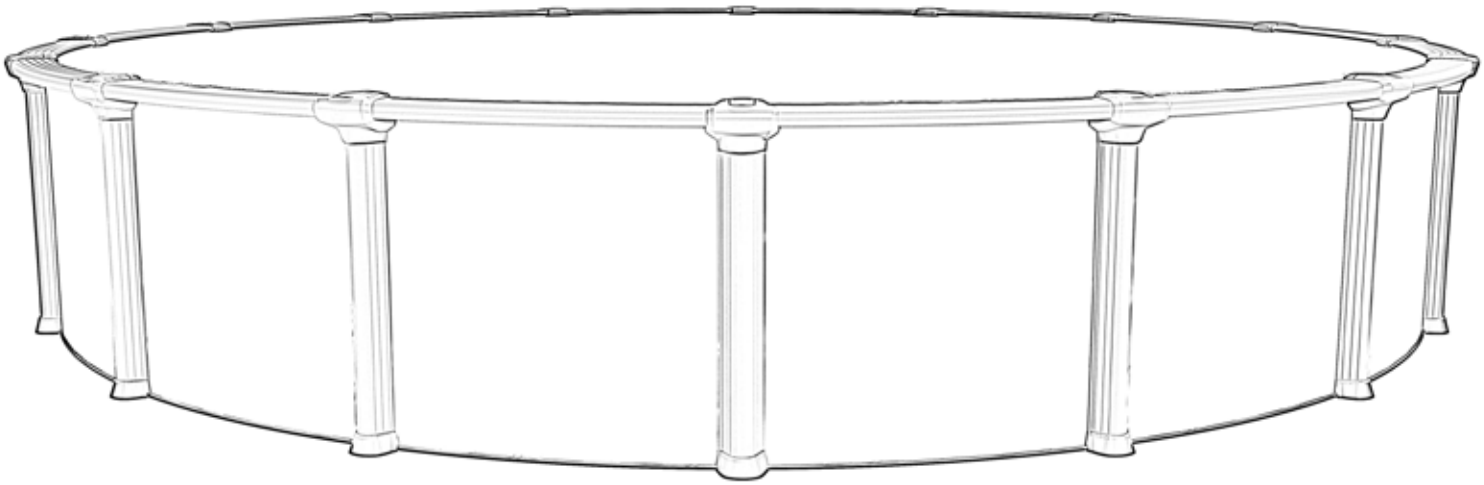

PSRE-RD-SSPSRF1

05.2024

ABOVE GROUND POOL SAFETY - PLEASE READ BEFORE INSTALLATION!

WARNING

FAILURE TO HEED THESE WARNINGS CAN RESULT IN PERMANENT INJURY, PARALYSIS FROM A BROKEN NECK, ELECTROCUTION OR DROWNING. THIS POOL IS NOT DESIGNED FOR DIVING OR JUMPING! DANGEROUS INJURY CAN RESULT. SHALLOW WATER!

Carefully read, understand and follow all information in this user manual before installing and using the swimming pool. These warnings, instructions and safety guidelines address some common risks of water recreation, but they cannot cover all risks and dangers in all cases. Always use caution, common sense and good judgment when enjoying any water activity. RETAIN THIS INFORMATION FOR FUTURE USE.

Your pool contains a large quantity of water, and is deep enough to present inherent dangers to life and health unless the following safety rules are strictly observed. First-time users run the highest risk of injury. Make sure everyone understands and encourage all users especially children to learn how to swim. Learn Basic Life Support (Cardiopulmonary Resuscitation-CPR) and refresh this knowledge regularly. Instruct all pool users, including children, what to do in case of an emergency. Keep a working phone and a list of emergency phone numbers near the pool. This can make a life-saving difference in the event of an emergency. To ensure your pool is used safely you MUST observe the following safety precautions:

SAFETY RECOMMENDATIONS

Make sure everyone using your swimming pool is aware of these recommendations and follows them.

1. NEVER JUMP AND DIVE. Your above ground pool is not deep enough to safely allow diving or jumping. This can result in concussions, paralysis, drowning and even death.

2. NEVER SWIM ALONE. If something happens to you, no one will be able to help you. Someone should always be available to lend assistance in an emergency.

3. NEVER LEAVE CHILDREN UNATTENDED. Never leave a child alone and unsupervised in or near the pool, not even for one second. There is no substitute for constant adult supervision.

4. NO ROUGH PLAY OR RUNNING NEAR THE POOL. Surfaces can become slippery and hazardous when wet, and can result in falls causing serious injuries.

5. RESTRICT ACCESS TO THE POOL. Do not leave chairs or other furniture beside the pool that could be used by a child to climb up into the pool. Ladders must be removed whenever the pool is unattended. A fence with a lockable gate around the pool or yard is strongly recommended and may be required by law in some jurisdictions. Secure doors and windows, where applicable to prevent unauthorized access to the swimming pool. If you have a deck overlooking the pool, you must have a door with an an automatic locking system restricting access to water. Remove all toys from the swimming pool and surrounding area when not in use to avoid attracting children to the pool. Barriers, pool covers, pool alarms or similar safety devices are helpful aids, but they are not substitutes for continous adult supervision.

6. LIFE SAVING EQUIPMENT. Keep a safety rope 1/4” by 50ft with a flotation buoy with an outside diameter of 15”. Have it accessible in a prominent area by your pool. Keep a pole not less than 16 feet (4,88m) long with a blunt or hook end available at poolside in case of emergencies. Weak swimmers and non-swimmers should wear personal protection equipement when using the pool.

7. LIGHT THE POOL AT NIGHT. If the pool is used after dusk, adequate lighting must be provided. Illumination in the pool area must be sufficient to clearly judge pool depth and all features in and around the pool. For lightning recommendations, consult your local licensed electrical contractor.

8. KEEP OF TOP LEDGES. Do not walk or sit on the top ledges, they can be slippery and result in dangerous falls.

9. NO ALCOHOL OR DRUGS. Never drink alcoholic beverages, use any intoxicants or medication which could hinger your judgment and reflexes.

10. KEEP YOUR POOL CLEAN AND SANITARY. Your filter system will remove suspended particles from the water and the surface skimmer will remove insects, leaves and other debris from the water surface. Use the correct pool chemicals as directed to destroy harmful bacteria and prevent formation of algae. Remember, unsanitary water is a serious health hazard.

11. POOL COVER SAFETY. The cover must have a tamperproof locking retainer cable that positions the cover around the pool wall and keeps it securely in place. Never allow anyone, especially children on the cover. Asphyxiation or drowning could result. Be sure to remove pool cover completely from the water surface before entering the pool. When purchasing any pool cover, please consult a swimming pool professional.

12. POOL CHEMICALS. Store pool chemicals out of the reach of children. Always follow chemical manufacturer’s instructions when storing, handling and dispensing pool chemicals.

13. DO NOT USE GLASS BOTTLES OR CONTAINERS in or around the pool. It can cause injuries or damage the pool.

14. ELECTRICAL DAMAGE. Never touch or attempt to service electrical equipment, including the filter when your body and or the ground is wet. Electrocution or permanent injury due to high voltage (120V AC) could result. The pool should be bonded in accordance with Section 680-26 of the National Electrical Code. For further assistance contact your dealer or local licensed electrician. Do not use pool during electrical or rain storms.

15. CHECK FOR DAMAGE. Periodically check your pool and ladder components for damage and wear. Be sure all screws are in place. Replace all damaged or worn components and tighten all screws before you use the pool, deck or ladders. At first sign, remove rust and touch up immediately.

16. POOL PARTS. Never modify the pool or accessories, or remove or drill holes in the pool, deck or ladder components unless instructed. Your pool wall is made of thin metal, there is an inherent cut hazard with metal so use gloves during installation. Always use Original Equipment Manufactured parts for your replacement parts.

FOLLOW ALL SAFETY INSTRUCTIONS

Read and follow all safety instructions packaged with pool, ladder, deck or any other accessory. Additional pool safety publications can be obtained by contacting the Pool and Hot Tub Alliance (www.phta.org).

IMPORTANT

TO OWNERS AND INSTALLERS: The safety stickers must be installed as per the following instructions. Failure to properly install warning labels will void warranty. Failure to mount these safety labels may subject you to substantial liability in case of injury. These warnings are not to be removed under any circumstances! If they become discolored or fall off, please request replacements which will be sent at no charge.

PLACE SIGN ON TOP LEDGE, OPPOSITE ENTRY TO POOL.

PLACE SIGN ON WALL NEXT TO POOL ENTRY.

REMEMBER TO WATCH CHILDREN.

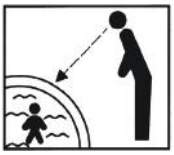

IMPORTANT INFORMATION
ABOUT YOUR LINER

We do not make or supply liners for our pools.

Please contact your liner's manufacturer with questions or if instructions are not included with the liner.

Liner must be installed per the liner manufacturer's instructions.

Incorrect liner installation may void the warranty.

PARTS LISTING

SERENA ROUND
PSRE-**52SSPSRF1

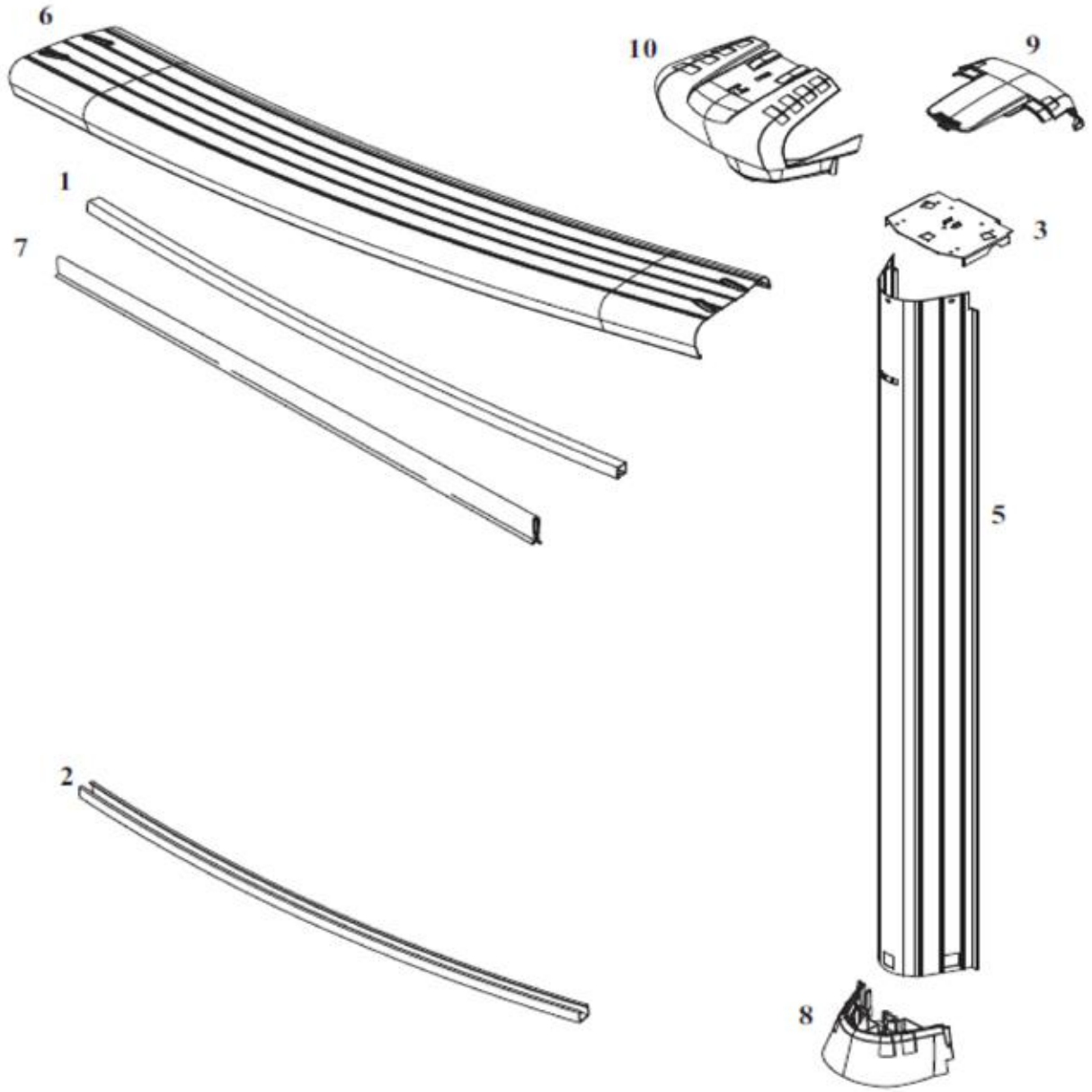

IMPORTANT NOTE:
Make sure you have all the parts necessary before you start installation.

PARTS LISTING

Product Description:	SERENA ROUND											
Product Code	PSRE-**52SSPSRF1											
	Qty Required for Installation (by Size)											
Index #	Description	Part #	Length	08'	12'	15'	18'	21'	24'	27'	30'	33'
9	Top Cap Small 1/2 Inner	22074	8"	11	11	11	13	15	17	19	21	24
10	Top Cap Large 1/2 Outer Curved	22075	8"	11	11	11	13	15	17	19	21	24
8	Top Cap Boot	22077	8"	11	11	11	13	15	17	19	21	24
6	Top Rail	22064	27-1/4"	11								
6	Top Rail	22063	40-1/4"		11							
6	Top Rail	22065	50-3/8"			11						
6	Top Rail	22079	50-3/4"				13					24
6	Top Rail	22068	51-1/4"					15				
6	Top Rail	22078	51-7/8"						17	19		
6	Top Rail	39771	52-1/2"								20	
1	Inner Stabilizer	38500	29-1/2"	11								
1	Inner Stabilizer	38501	42-5/8"		11							
1	Inner Stabilizer	38502	53-1/4"			11						
1	Inner Stabilizer	38503	54-1/8"				13					
1	Inner Stabilizer	38505	54-7/16"					15				
1	Inner Stabilizer	38506	52-1/4"						18			
1	Inner Stabilizer	38507	52-7/8"							20		
1	Inner Stabilizer	38509	51-1/4"								23	
1	Inner Stabilizer	38510	53-3/8"									24
7	Plastic Coping	10296	48"	7	9	12	14	16	19	21	24	25
3	Top Plate	29915	7"	11	11	11	13	15	17	19	20	24
5	Upright	22070	50-3/8"	11	11	11	13	15	17	19	21	24
2	Bottom Rail	18837	25-1/4"	11								
2	Bottom Rail	38736	38"		11							
2	Bottom Rail	14950	49"			11						
2	Bottom Rail	14949	50"				13					
2	Bottom Rail	35413	50-1/2"					15				
2	Bottom Rail	14910	51-1/16"						17			
2	Bottom Rail	14911	51-5/16"							19		
2	Bottom Rail	35414	51-9/16"								21	
2	Bottom Rail	15641	49-9/16"									24
*	Hardware	44-10049		1	1	1						
*	Hardware	44-10051					1	1				
*	Hardware	44-10052							1	1		
*	Hardware	44-10059									1	
*	Hardware	44-10055										1
*	Envelope Safety Complete	95-0007		1	1	1	1	1	1	1	1	1

*May not be pictured

INTRODUCTION:

Congratulations on becoming the owner of a new above ground swimming pool. This is the instruction packet for installing your swimming pool. The following are some helpful hints that you should take into consideration before installing your pool.

1) Read through the entire instruction booklet before you begin. This will enable you to find out exactly what is involved with installing your swimming pool before you begin.

2) DO NOT ATTEMPT INSTALLATION IN WINDY OR GUSTY WEATHER. This will not only make installation more difficult, it may result in damage to your pool before it is completely installed.

3) Although we have broken down the installation into many simple steps, you will probably find that Steps 1 and 2 will be the most labor-intensive and time-consuming steps. Once you have completed those two steps you should find that the rest of the installation moves along much more quickly.

4) Please be sure to review all safety material and local codes before beginning your installation. There is a yellow safety envelope packed with your pool. This envelope contains safety material and warning stickers to be placed on your pool. If you are missing any of these items, please contact your dealer or the factory to obtain them. The warranty is void if all safety precautions are not followed.

5) In the event that you need to make a warranty claim, it is important to know the size and model of your swimming pool in order to expedite the handling of your claim. Please fill in the information below and keep for your records. All of this information can be found on the labels attached to the cartons in which your pool packed.

NAME OF POOL: _____

SIZE OF POOL: _____

DATE OF PURCHASE: _____

NAME OF POOL WALL: _____

NAME OF LINER: _____

6) Make sure you have the necessary tools and materials before beginning your installation.
Below is a list of the tools and materials needed.

- Shovel
- Tape measure
- Phillips head screwdriver
- Duct tape
- Sand
- Filter
- Skimmer/return fitting
- Carpenters level and/or transit (optional)
- Patio blocks (2" x 8" x 16")
- Box cutter (razor blade)
- Tamp
- 5/16” wrench
- 1/4" wrench

ROUND POOL INSTALLATION INSTRUCTIONS

POOL AREA DIMENSIONS (POOL RADIUS PLUS ONE FOOT)

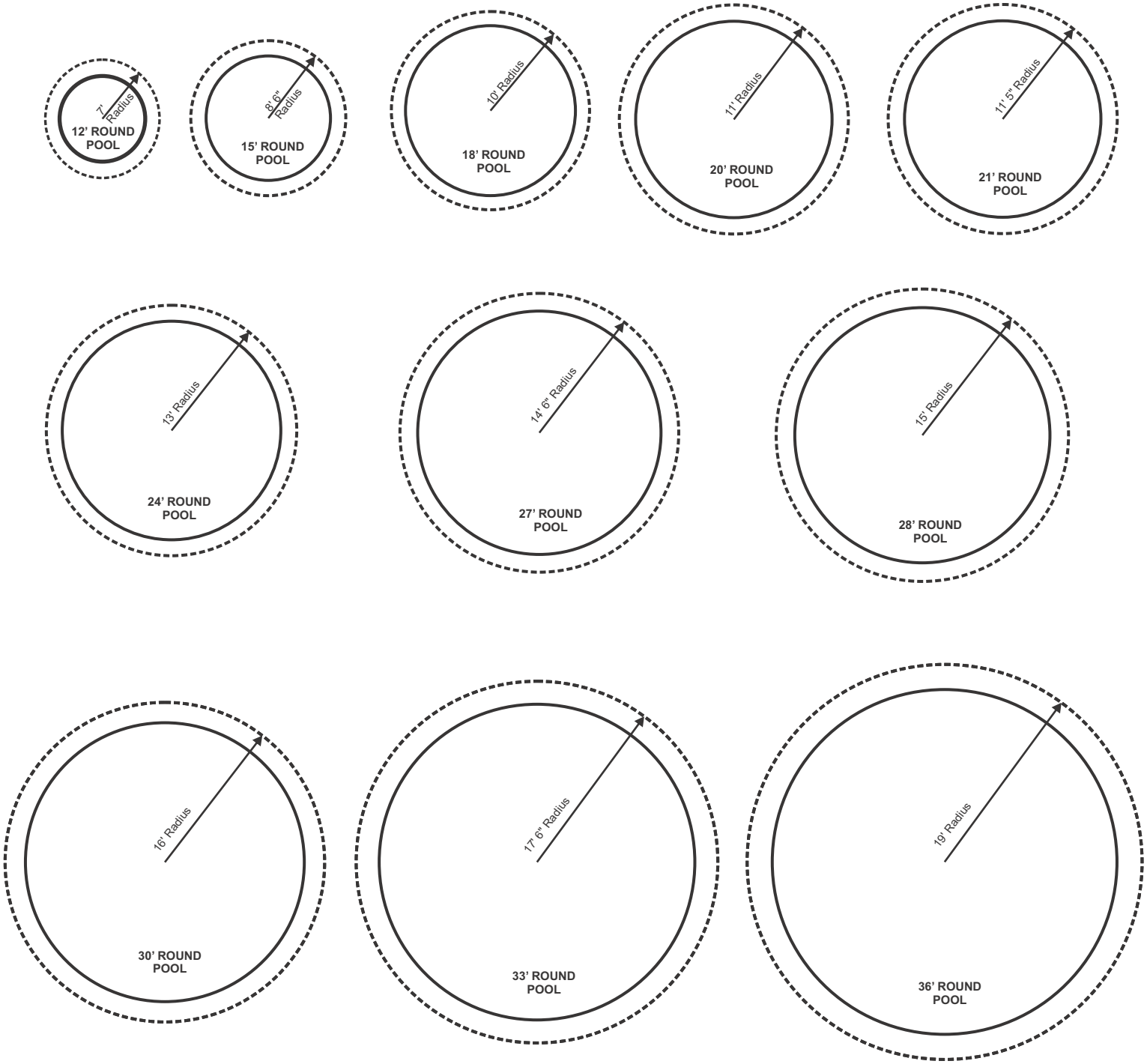

Radius is the measurement from the center point of the pool to the pool wall.

STEP 1: POOL LOCATION:

Do not locate pool over underground lines, septic tanks, under electrical lines, near hazardous structures, or out of local code restrictions. It is essential that the area selected for your pool has a level and firm base. Do not assemble your pool on asphalt, tar or oil-based surfaces. Avoid areas with sharp objects, or ground treated with weed killer or other chemicals. Also avoid areas where nut grass, Bermuda grass or bamboo grass grows, as they can grow through your liner. Grass must be removed. Refrain from finishing up your pool with stones, rocks, gravel, etc, to avoid chipping of the paint and damaging the pool wall. Most decorative rocks are very acidic and they can damage/corrode your pool wall beyond repair. Do not place components such as filters, pumps, and heaters in a way that they can be used as a means of access to the pool by young children. Be sure to follow all local building codes and obtain all building permits required for your area.

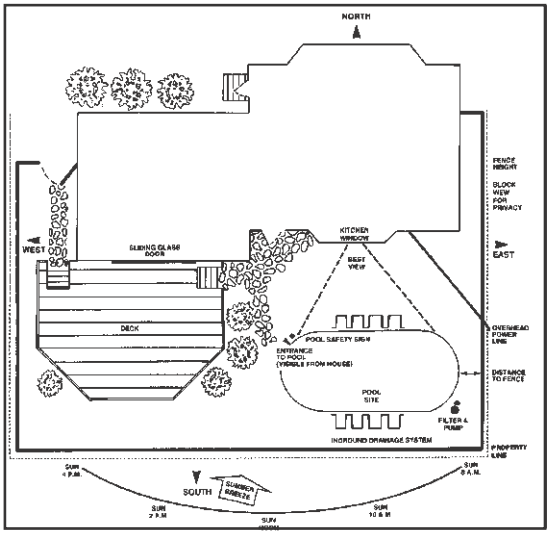

*BE SURE TO AVOID:
- All electrical wires
- All gas lines
- Septic tanks
- Cesspools
- Dry wells
- Tree roots/stumps
- buried debris (trees, building material, etc.)
- sudden slopes within 6' of pool area

STEP 2: PREPARE THE AREA:

Determine the pool circumference by putting a stake in the ground at the center of the location desired, and, with a line equal in length to the radius of the pool area (1/2 the pool size plus 12”), mark off the circumference with a sharp object, lawn edger, white powder, or spray paint. Remove all of the sod and grass within the marked circle.

After all of the sod has been removed from the pool site, you must make the pool area absolutely level as measured by a level or transit, not simply by the naked eye. Find the lowest spot within the pool area and level the ground to that lowest spot. Do not add dirt to the low areas as that will cause settling after the pool is filled with water. It is the high areas that must be dug away. The footing (perimeter) of the pool must be a solid foundation to prevent the pool from settling into dirt that is loosened by rain and water splashing over the side. Once again, clean the area of all sharp objects, including roots that can damage your swimming pool. For leveling, we recommend that you use a long, straight edged board and a carpenter's level or transit.

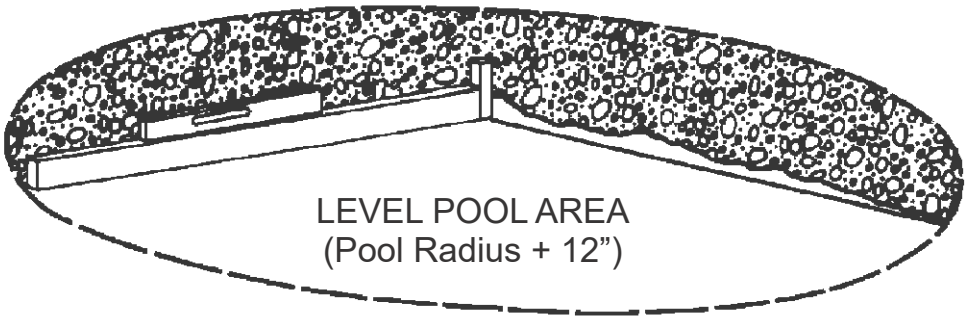

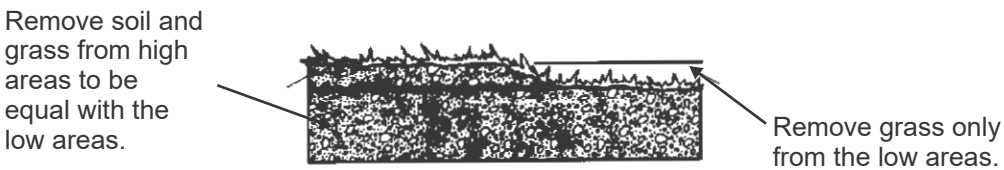

STEP 3: BOTTOM WALL RIM ASSEMBLY:

A. Use your pool parts breakdown sheet to separate all pool components, becoming familiar with each part.

B. Take the curved bottom rails and place them in a circle along the circumference of the pool area.

IMPORTANT: Make sure you are using the bottom rails and not the inner stabilizer bars. The bottom rails on some pool models are made of resin and not metal, their profile measure is about 1" X 5/8". Depending on your pool, the stabilizers bars can be metal or resin but the metal bars have a male and female ends while the resin bars do not. Their profile measures 5/8"x5/8". The bottom rails are the larger width rails that have the straight cuts on both ends. The bottom rails do not interlock (see diagram).

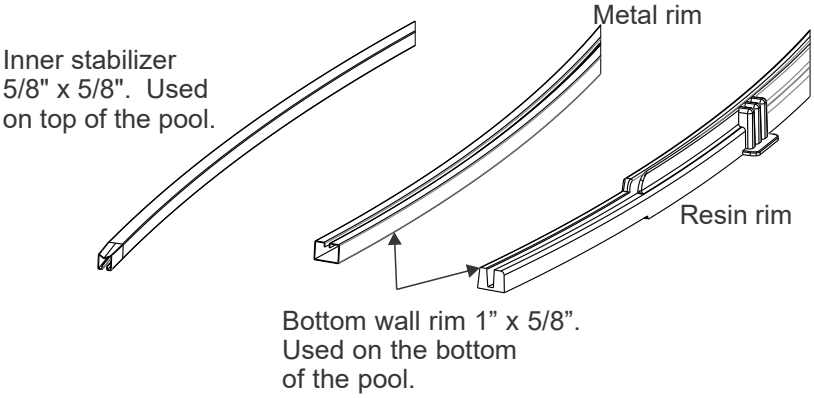

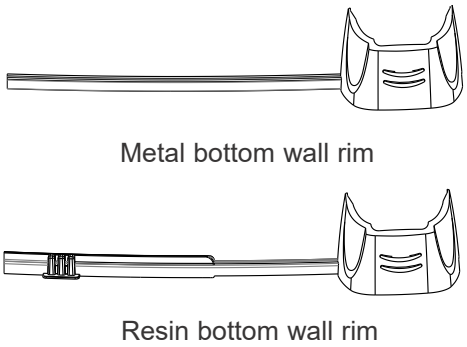

C. Assemble the rails by using the bottom plates or bottom cuffs to join them together.
IMPORTANT: Some pools have resin bottom plates or resin bottom cuffs rather than the traditional metal bottom plate. Please refer to your pool parts breakdown sheet to confirm which component applies to your pool. Rails should be inserted into the bottom plates or cuffs up to, but not exceeding, the stops on the plate or cuff. Rail can be squeezed between thumb and forefinger to facilitate insertion into the plates or cuffs.

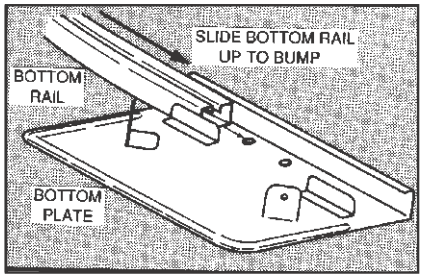

* Adjust rails in or out as necessary to form a true circle

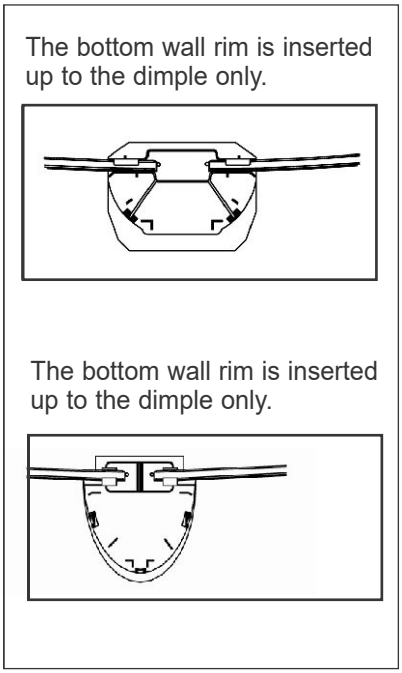

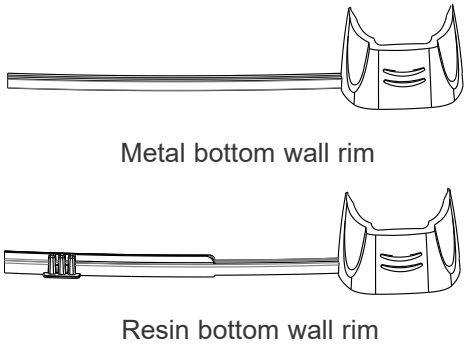

STEP 3: BOTTOM WALL RIM ASSEMBLY (cont.):

D. Check the roundness of your circle by measuring the diameter across in several locations. Since the rails do not automatically form a true circle, DO NOT SKIP THIS STEP! Otherwise, you might end up with a shape other than round, which can cause problems later on. Once you have formed a true circle, stake the bottom rails at every other rail with a screwdriver, being careful not to scratch the rails.

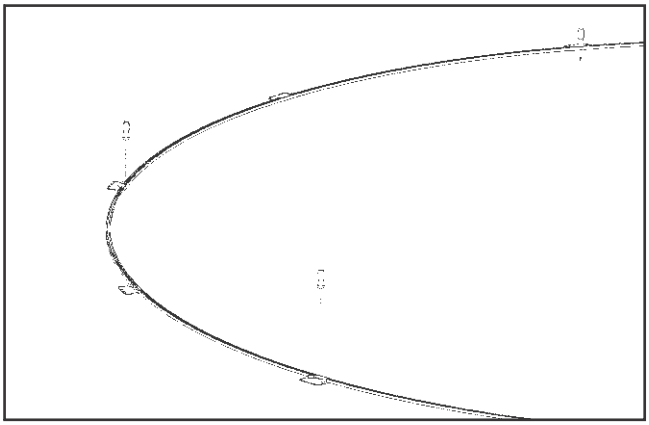

FOR POOLS WITH **ODD** NUMBER of BOTTOM PLATES or Bottom Covers: Measure from bottom plate to center of opposite bottom rail at every other bottom plate. When true, stake into position.

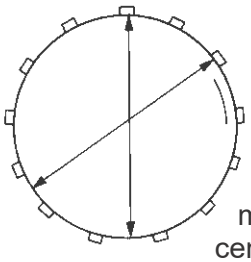

Measurements must go through center of the pool.

FOR POOLS WITH **EVEN** NUMBER of BOTTOM PLATES or Bottom Covers: Measure from bottom plate to opposite bottom plate at every other plate. When true, stake into position.

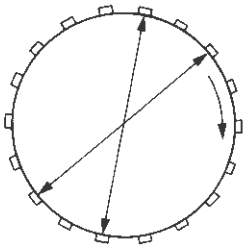

STEP 4: PATIO BLOCK INSTALLATION

Once the frame is in position, begin centering bottom plates or cuffs on 2”x8”x16” patio blocks. Sink patio block into the ground under bottom plate or cuff, making sure that the block is level in all directions (side to side as well as front to back). Repeat this step around the frame making the tops of all blocks level with the ground. Do not install blocks or rails on loose, sifted soil or sand. There must be no space between the ground and the bottom of the rails. All patio blocks must be flush with the ground, solid and level with each other in all directions. You may remove a bottom rail at this time to cart in fine sand for the 3" base and for the 4" cove (Step 9), as long as your pool ring remains staked in position (Foam pool cove can be substituted for the 4" sand cove placed on top of the 3" sand bed). Make sure you replace the bottom rail in its proper position. A chalk outline of the bottom plates or cuffs on the patio block is an easy and temporary way to ensure that your track does not move throughout the remainder of the installation.

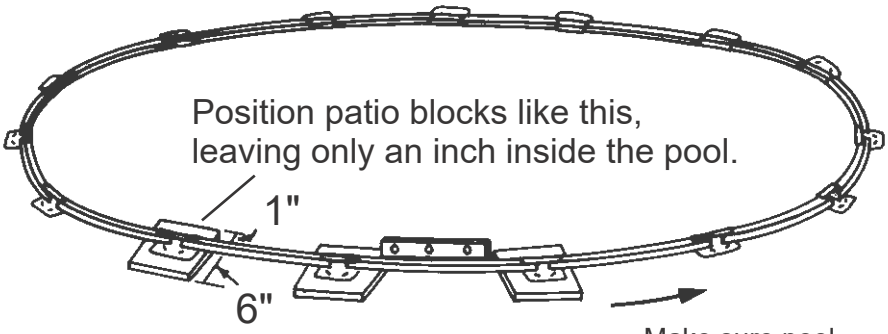

Make sure pool is level from block to block.

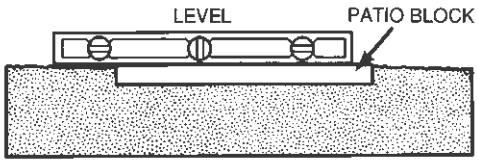

Check for levelness in all directions.

STEP 5: PRE-ASSEMBLY:

This is a good time to start the pre-assembly of the uprights. It is easiest to line all uprights next to each other in a line, leaning them against a fence or some other sturdy object. On most models, the tops of the uprights can be identified by either an extra hole in the middle, or by an extra hole on each side (depending which pool you have) for the decorator caps. Place the metal top plate on the upright, ensuring the holes line up, and the hooked part of the plate is facing the open end of the upright (the side that goes against the pool wall). Now put a #10 x ½" screw in the center hole only. Do not install screws in the two side holes until later. This will make things easier and more efficient later in the installation process.

Next, install the fence post holders onto the uprights, if you have purchased a fence to go around your pool (see separate instructions). If not, or when that is completed, you should line the uprights around the pool at every bottom plate or bottom cuff for your convenience later on.

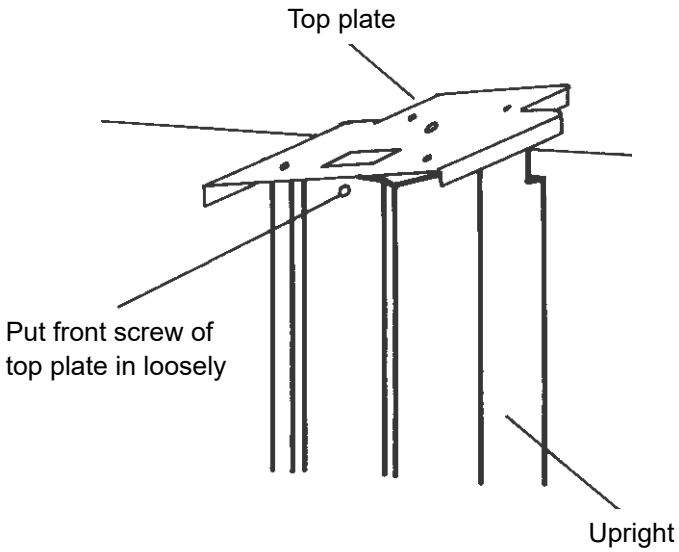

This is one example of a top plate. The plate for your pool may look a little different.

STEP 6: WALL INSTALLATION

In this step, you will use the wall carton as a base to unravel the pool wall. Locate the area that you wish to put the skimmer and return so that you can start the wall behind the appropriate upright. Unravel the wall a little at a time, inserting into the bottom rails as you go. Do not unravel the entire wall at once, because it will make installation much more difficult. As you unravel the wall, you will need something to hold it up. We recommend placing landscaping stakes around the outside of the pool and clipping the wall to the stakes as you go. If you cannot get landscaping stakes, the other option is to temporarily install stabilizer rails and uprights to keep the wall in place.

If the side wall seems too long or too short, make the bottom ring larger or smaller by equally sliding the bottom rails in or out of the bottom plates. If the ground is uneven, the wall may jump out of the bottom track. Correct this condition by rechecking the level.

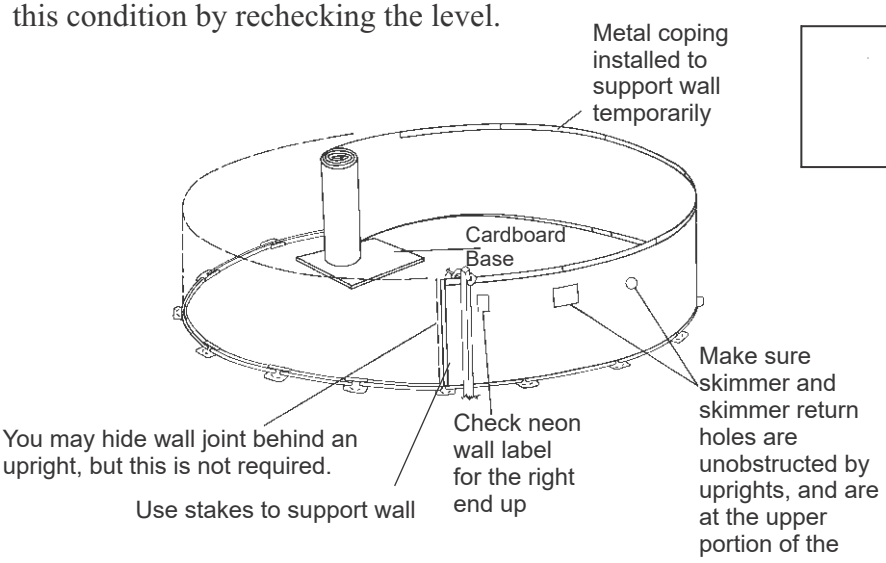

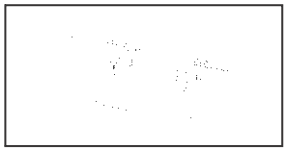

Rails can be slid in or out from the stops on the bottom plates or bottom covers to adjust for wall length being a little off.

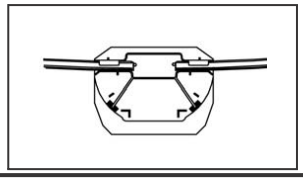

DO NOT ATTEMPT THIS STEP IN WINDY CONDITIONS, AS THE WALL IS VERY HEAVY AND EXTREMELY DIFFICULT TO MANAGE ON A WINDY DAY.

IF THE WIND DOES CATCH THE WALL DURING INSTALLATION, IT CAN CREATE DANGEROUS SITUATIONS AND/OR CAUSE DAMAGE TO THE POOL.

STEP 7: WALL JOINT ASSEMBLY:

***** We manufacture two different kinds of wall joint assemblies. One has a single row of bolts with wall bars, and the other is a staggered double row pattern with wall bars. Please check which design your pool has and follow the appropriate instructions below.**

Type #1 Single Row

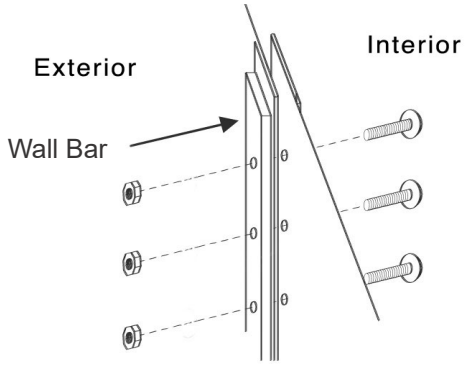

IMPORTANT- This operation must be done carefully! When joining the sidewall, make sure that the strips do not touch each other. One bar must be inside the pool (the bolts will touch this bar) and one bar must be outside the pool (the nuts will touch this bar). Insert the bolts with the bolt head to the inside and the nuts to the outside of the pool. Do not tighten until all bolts have been inserted. If your screwdriver slips and scratches the head of the bolt, file the scratch smooth so that it cannot puncture the liner. It is recommended that you cover the heads of the bolts, on the inside of the wall, with three layers of duct tape. If the insertion of the wall in the bottom rail is tight at the point where the wall is joined together, insert a screwdriver and twist to make enough room, again being careful to not scratch the wall or the bottom rail.

REMEMBER:
ALL NUTS SHOULD BE AS TIGHT AS POSSIBLE USING HAND TOOLS. BARS MUST NOT TOUCH EACH OTHER. EVERY HOLE FROM TOP TO BOTTOM OF THE WALL/WALL BAR SYSTEM MUST HAVE A SECURELY TIGHTENED NUT AND BOLT. IF THIS IS DONE INCORRECTLY YOUR POOL WILL BREAK AND THE WARRANTY WILL BE VOIDED!

Type #2 Staggered Bolt Pattern

IMPORTANT - This operation must be done carefully! When joining the sidewall, make sure there are two strips. One must be installed on the inside of the pool (the head of the bolt will touch this bar) and the other on the outside of the pool (the 1/4" nuts will touch this bar). Please reference to the figures below. Insert the bolts with the bolt head to the inside and the nuts to the outside of the pool. Do not tighten until all bolts have been inserted. If your screwdriver slips and scratches the head of the bolt, file the scratch smooth so that it cannot puncture the liner. It is recommended that you cover the heads of the bolts, on the inside of the wall, with three layers of duct tape. If the insertion of the wall in the bottom rail is tight at the point where the wall is joined together, insert a screwdriver and twist to make enough room, again being sure not to scratch the wall or the bottom rail.

• If you are missing any hardware, do not leave empty holes in the wall joint assembly. Doing so will cause your pool to break!

See your pool dealer for additional hardware in the case of shortage.

STAGGERED BOLT WALL BAR SYSTEM

*** Every hole from top to bottom of wall/wall bar system must have a securely tightened nut and bolt. ***

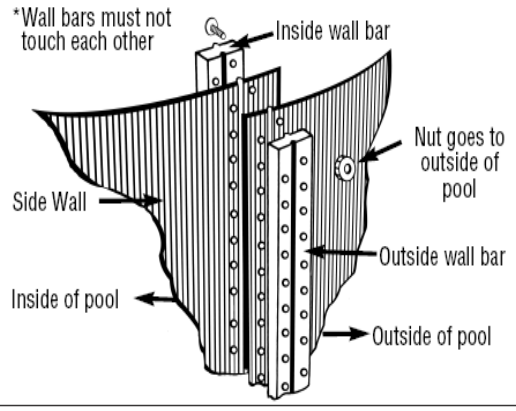

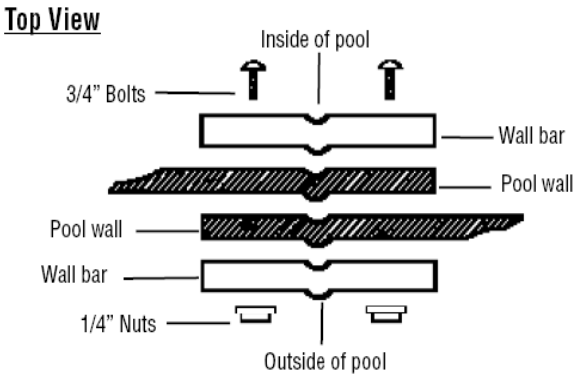

REMEMBER:
ALL NUTS SHOULD BE AS TIGHT AS POSSIBLE USING HAND TOOLS. BARS MUST NOT TOUCH EACH OTHER. EVERY HOLE FROM TOP TO BOTTOM OF THE WALL/WALL BAR SYSTEM MUST HAVE A SECURELY TIGHTENED NUT AND BOLT. IF THIS IS DONE INCORRECTLY YOUR POOL WILL BREAK AND THE WARRANTY WILL BE VOIDED!

STEP 7: WALL JOINT ASSEMBLY (cont.):

Many pool walls come with a Wall Saver Panel. The Wall Saver Panel is a separate piece of the pool wall that has the skimmer and return openings in it. The Wall Saver Panel is joined to the pool wall at each end. Your pool will have 2 wall joints. On many size pools and many Wall Saver Panels this means that one (1) of the joints will be exposed and clearly visible on the outside of the pool instead of being behind a pool upright. This is normal. See the image below for how the wall saver panel is installed in the pool wall.

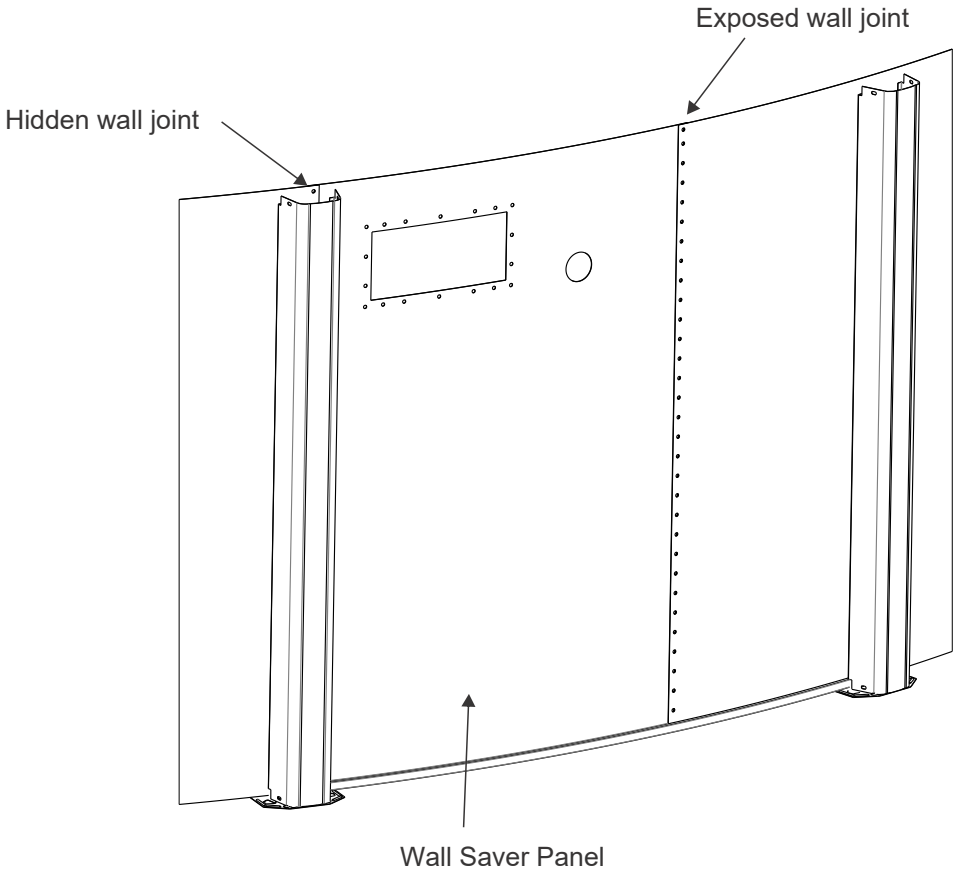

STEP 8: UPRIGHT INSTALLATION

If you have not done so already, install uprights onto the bottom plates or the bottom cuffs. See appropriate step below for your pool.

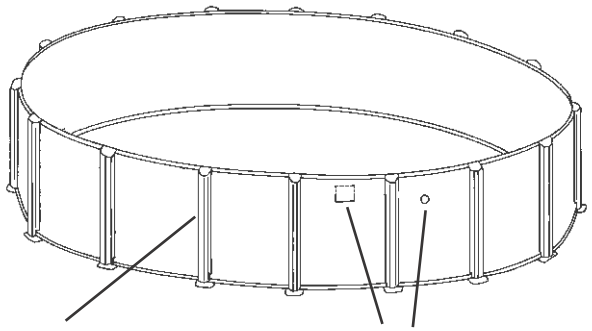

*Wall joint is hidden behind the upright on most pools. This assures that the skimmer and the skimmer return holes are not obstructed. It is not possible to hide the wall bars on some of the smaller size pools that we make, such as the 12' round, and the 8' round.

TYPE#1 BOTTOM PLATE POOLS:

- Models with metal or resin bottom plates will require one, two, or three #10 x 1/2" screws for each upright, depending on which model you have.
- The top plates can remain unsecured for now, but they should be temporarily clipped over the wall to prevent them from falling backward.
- If your pool has an additional resin "boot" for the bottom of the upright, secure them to the uprights at this point using two more #10 x *1/2""* screws.
- Check pool for roundness again, making sure the diameter is the same in all directions.

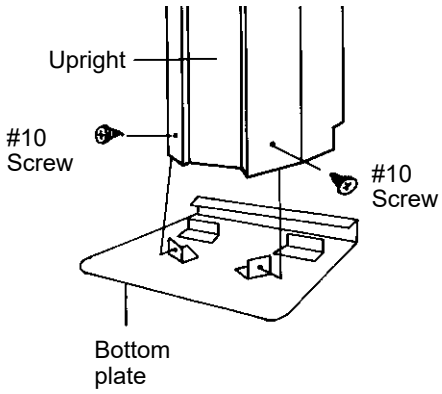

TYPE #2 BOTTOM CUFF POOLS:

- Models with resin bottom foot covers, do not require hardware in order to secure the upright at the bottom. Simply line up holes in the lower portion of the upright with the corresponding clips in the bottom cuff and push them down until they lock in place. When this is done properly, the upright will not be able to be pulled up without bringing the bottom foot cover with it.
- The metal top plates can remain unsecured for the time being, but they should be temporarily clipped over the wall to prevent them from falling backward.
- Check pool for roundness again, making sure the diameter is the same in all directions.

ACCENT CLIP INSTALLATION (Not applicable to all models of pools):

Some bottom foot covers and/or uprights have separate accent clips. This is a good time to snap those pieces on if your pool has them. Below are some examples of accent clips. These may be in different locations, depending on the model of the pool.

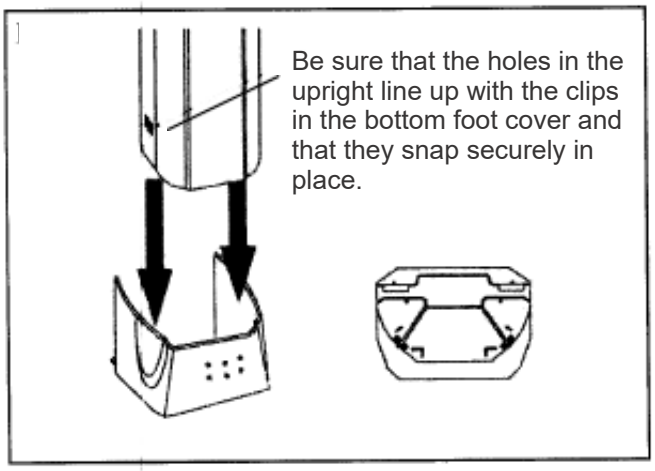

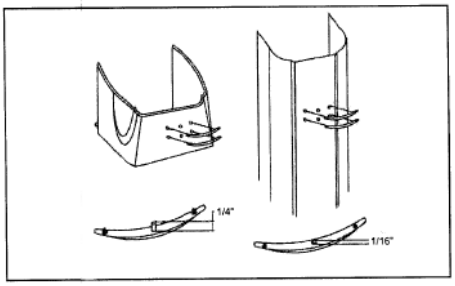

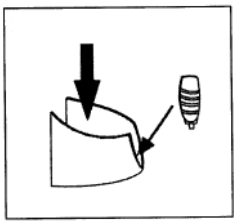

Please note the difference of the accent clips for the resin bottom foot cover and the steel upright. For proper fit, be sure to use the correct clips.

STEP 9: PREPARING THE COVE:

Build a sand cove against the pool wall by creating a 4" angle of sand (on top of the 3" sand base) giving you a total sand cove height of 7 inches where the base meets the metal pool wall (see diagram below). This will prevent the liner from creeping under the wall, and it will also protect the liner from any metal edges of the pool framework.

There should be no air space between the vinyl pool liner and the base the liner is resting on.

THIS STEP IS NOT OPTIONAL, IT MUST BE DONE.

Water the sand to compact it and use a trowel to spread it evenly. The cove is an important part of the pool structure. Take your time to make a complete, full-size cove.

Since earth containing chemicals can cause discoloration or corrosion, it is suggested that you place polyethylene plastic sheeting under the cove around the perimeter of the wall, so no earth comes in contact with the metal. Since the presence of such chemicals is beyond the control of the manufacturer, such damage is not covered under warranty.

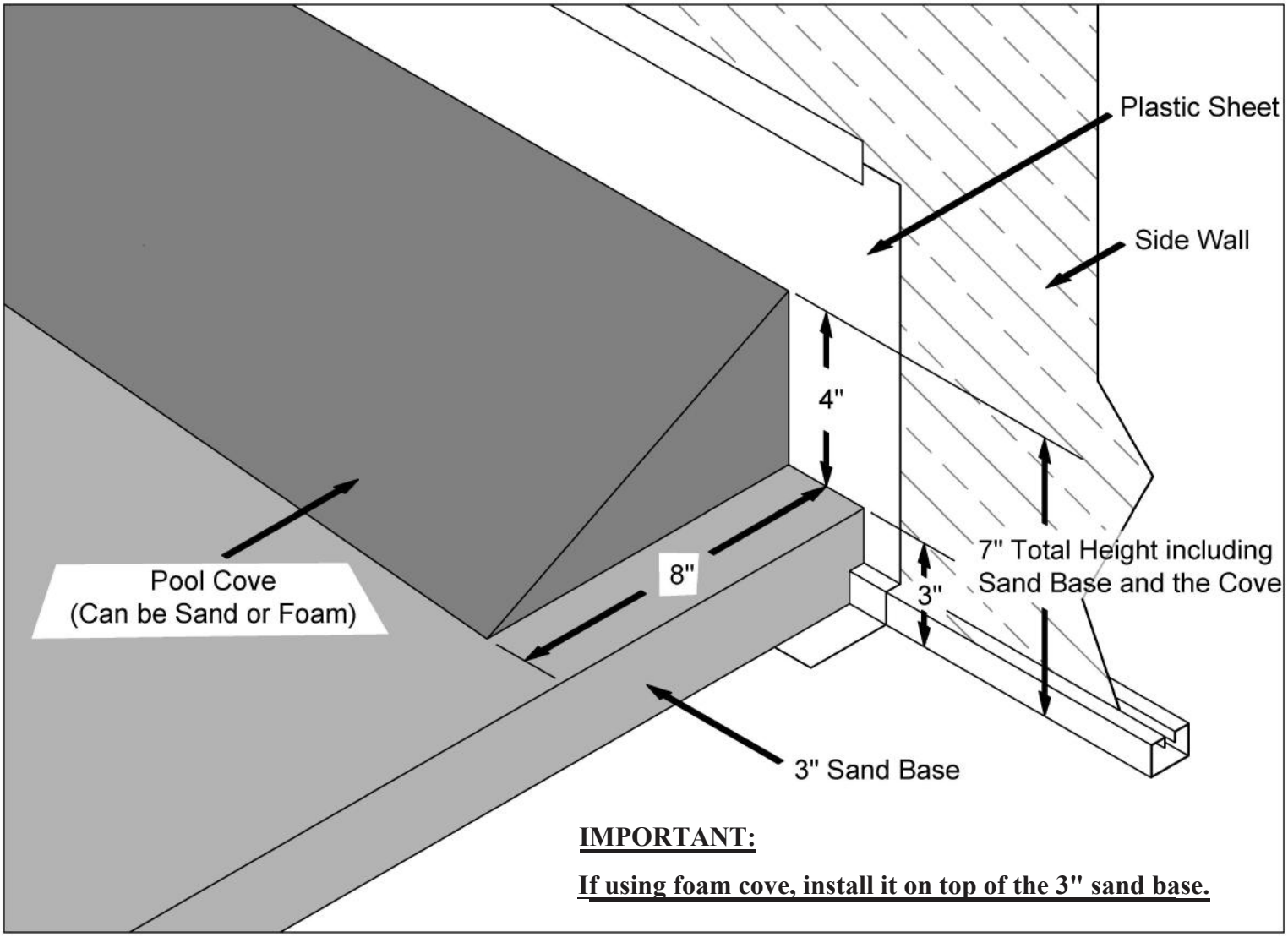

IMPORTANT NEXT STEP; Follow the liner manufacturer's instructions to install pool liner.

IMPORTANT INFORMATION
ABOUT YOUR LINER

We do not make or supply liners for our pools.

Please contact your liner's manufacturer with questions or if instructions are not included with the liner.

Liner must be installed per the liner manufacturer's instructions.

Incorrect liner installation may void the warranty.

STEP 10: UPRIGHT ASSEMBLY:

It is easiest to line up all the uprights next to each other. It helps to lean them up against a fence or some other sturdy object. On most models the top of the uprights can be identified by either an extra hole in the middle, or by an extra hole on each side (depending on which pool you have) for the decorator caps. Place the metal top plate on the upright making sure the holes line up and the hooked part of the plate is facing the open end of the upright (the side that goes against the pool wall). Now put a #10 x ½" screw in the center hole only. Do not install screws in the two side holes until later. This will make things easier and more efficient later down the line.

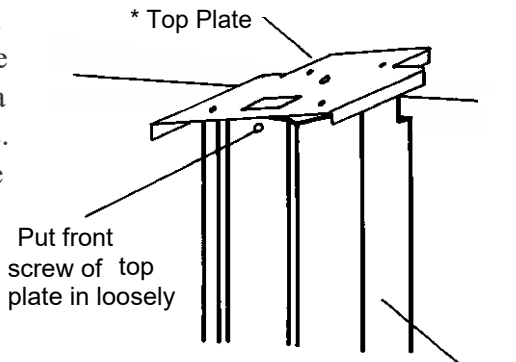

**This is one example of a top plate. The plate for your pool may look a little different.*

TYPE#1 - BOTTOM PLATE POOLS:

- Models with metal or resin bottom plates will require one, two or three #10 x 1/2" screws for each upright depending on which model you have.
- The top plates can remain unsecured for now, but they should be temporarily clipped over the wall to prevent them from falling backward.
- If your pool has an additional resin "boot" for the upright, secure them to the uprights at this point using two more #10 x 1/2" screws.
- Check curved ends of the pool for roundness again, making sure that the stakes should have not been moved and your pool is still a true oval shape.

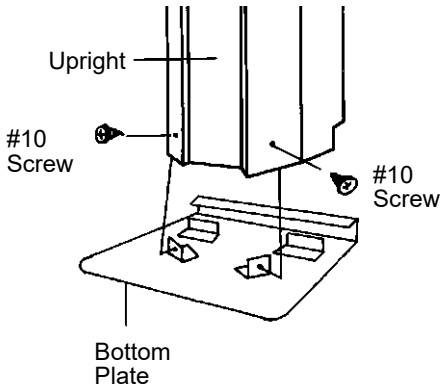

TYPE#2 - BOTTOM FOOT COVER POOLS

- Models with resin bottom foot covers, do not require hardware in order to secure the upright at the bottom. Simply line up holes in the lower portion of the upright with the corresponding clips in the bottom foot cover and push them down until they lock in place. When this is done properly the upright will not be able to be pulled up without bringing the bottom foot cover with it.

- The metal top plates can remain unsecured for the time being, but they should be temporarily clipped over the wall to prevent them from falling backward.

- Check curved ends of the pool for roundness again, making sure that the stakes have not been moved and your pool is still a true oval shape.

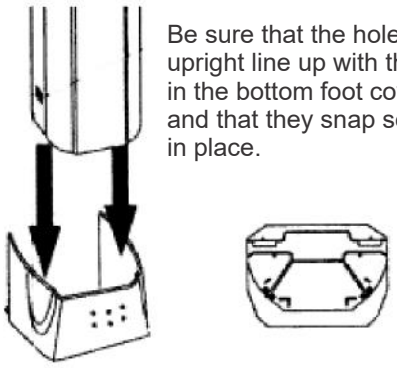

Be sure that the holes in the upright line up with the clips in the bottom foot cover, and that they snap securely in place.

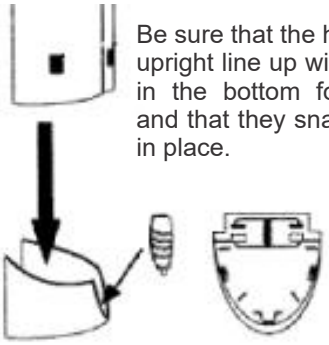

Be sure that the holes in the upright line up with the clips in the bottom foot cover and that they snap securely in place.

STEP 11 : SECURING THE UPRIGHTS:

For the uprights on the curved ends of the pool, you can now pull the front of the top plate (the hooked part) over the stabilizer bar and, after you are positive that the upright is level, you can now add the final two screws necessary to secure the uprights to the pool. If the uprights are not level, it will be very difficult to get the top rails to fit together. It is a good idea to use a carpenter's level to check that the upright is standing perfectly straight. If the upright is leaning left or right this is easy to correct before putting the final two screws into the top plate.

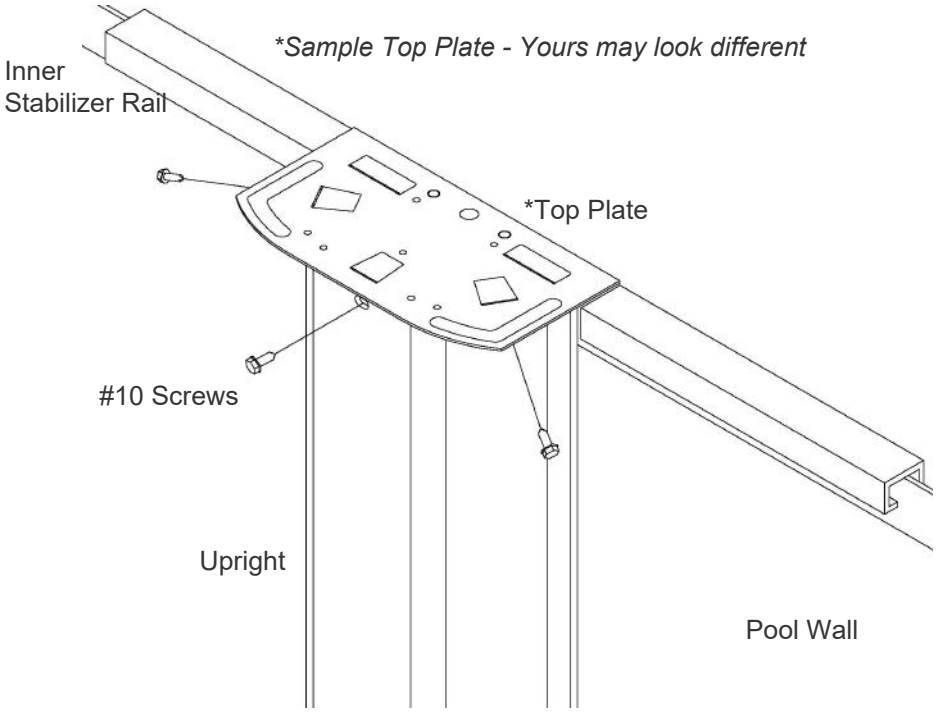

STEP 12 : TOP RAIL INSTALLATION:

Your pool either has metal top rails, or resin top rails. Please notice the different hardware that is necessary for the resin top rail pools.
You should have two people while installing the top rails. If a top rail falls in the pool, it can cut the liner.
Secure all metal top rails using # 10 x ½" screws into the corresponding holes in the top plates. Resin top rails require special #10 x 1" screws that have attached washers. When installing the top rails do not tighten screws until all the top rails have been installed. This will allow room for adjustments, if necessary, on the final few rails that are installed. Attach all top rails before the water is more than 12" deep, because if the pool is slightly out of round, you may have a problem getting the last rail to go on.

RESIN TOP RAIL INSTALLATION:

When a resin top rail pool is assembled, you must use special hardware to attach the resin top rail to the metal top plate. The special hardware is a #10 x 1" screw with built in washer.

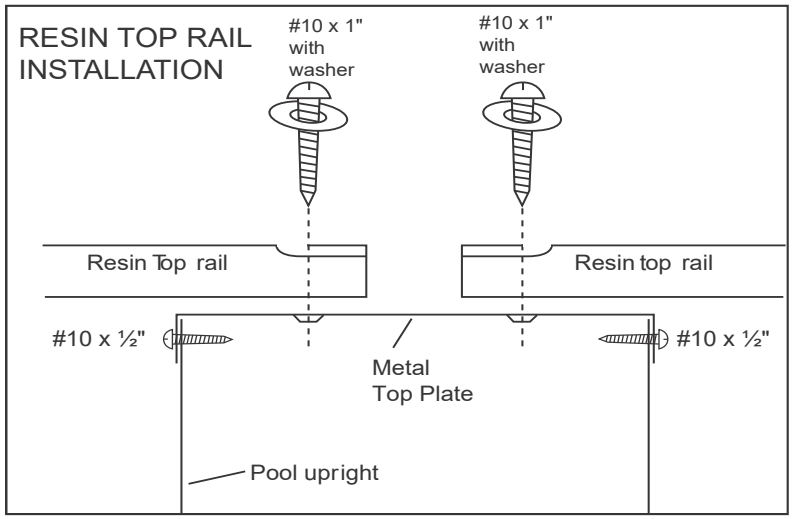

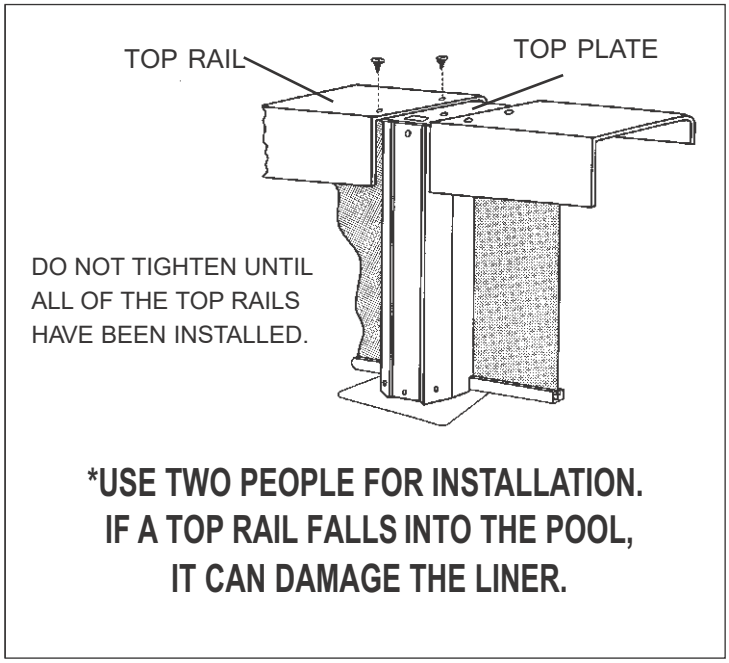

STEP 13 : TOP COVER INSTALLATION:

After all top rails have been installed, tighten all screws and attach the top covers as shown in the appropriate diagram for your pool.

2-PIECE RESIN TOP COVER: Center small half over hole in the top plate as shown and attach with a #12 screw. Slide the large half over the small half and secure using two #10 screws.

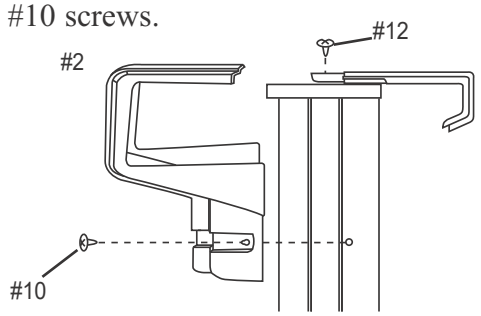

2 PC RESIN TOP COVER: Attach top part on top rail using the hooks. Use #12 screws to assemble bottom part with top part. Secure the assembly using two #10 screws.

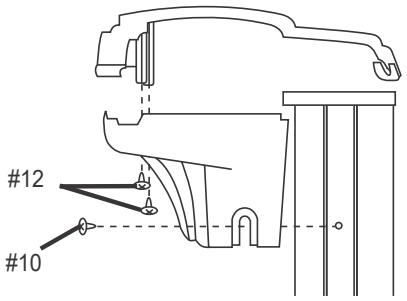

ONE-PIECE RESIN CLIP-ON COVER: This installation requires no hardware. Simply hook the back end of the top cover into place, and use your fingers or a screwdriver to gently flex the front tabs enough to hook the cover in place. Make sure that the top cover is centered over the upright when installing.

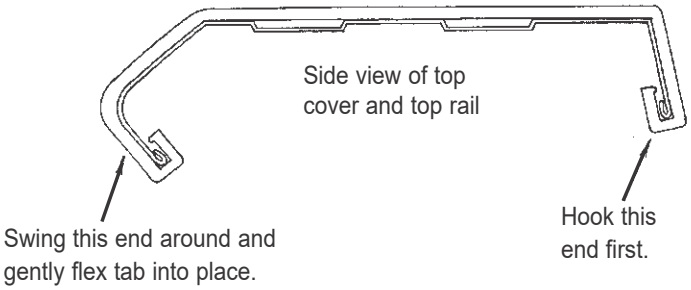

Bullnose rail is used for the illustration, but installation is the same for all 1-piece clip-on resin covers.

1) Attach the inner top cap using a #12 screw into hole #2.

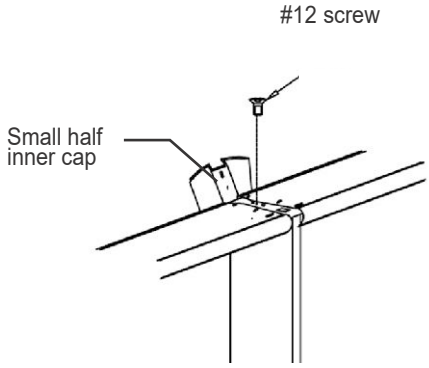

2) Attach the resin outer top cap using a #12 screw into hole. Put the grill over the screw when finished. See diagram below.

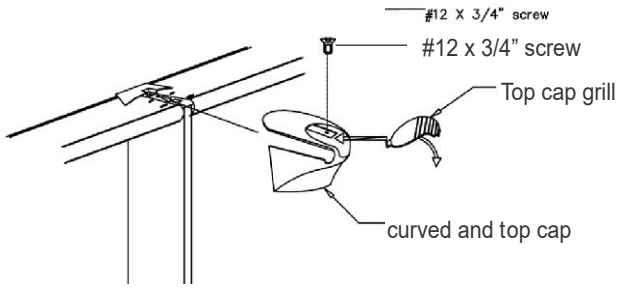

TWO-PIECE RESIN WITH ANGLE SUPPORT ATTACHMENTS ON THE SIDES:

1) Hook large half of cover under inside lip of top rail. Swivel cover down flat, centered over the upright.
2) Take angle support (small half) and position underneath top half, securing angle support to upright with 2 #10 screws on the sides (leave loose for adjustment). Then, take a #12 screw and connect angle support to top cover. A small space will occur. This is designed to take up expansion and contraction in manufacturing tolerances in the top rails.

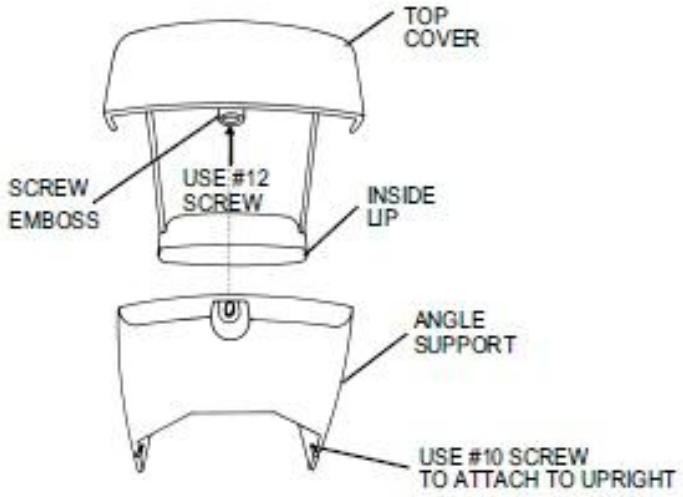

TWO-PIECE RESIN WITH ANGLE SUPPORT ATTACHMENTS ON THE FRONT:

1) Hook large half of cover under inside lip of top rail. Swivel cover down flat, centered over the upright.

2) Take angle support (small half) and position underneath top half, securing angle support to upright with a #10 screw in the front. Then, take a #12 screw and connect angle support to top cover. A small space will occur. This is designed to take up expansion and contraction in manufacturing tolerances in the top rails.

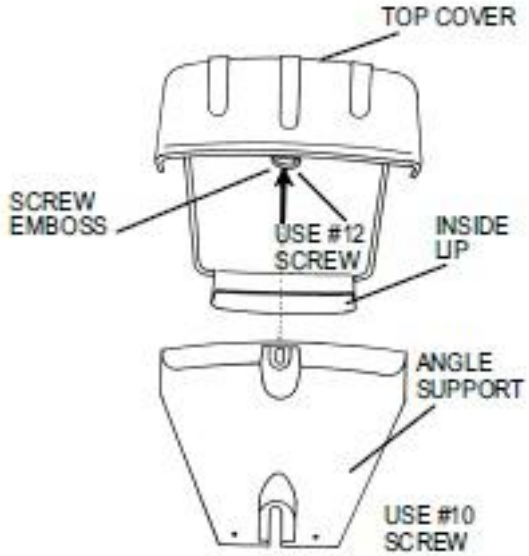

POOL INSPECTION

READ AND FOLLOW ALL INSTRUCTIONS

Keep your pool wall and frame clean. Always wash away any deposits of pool chemicals which land on the frame of your pool. Wash periodically with a mild soap solution (no abrasives). At least once a year use a clear non-yellowing household wax on all metal components.

Your pool and liner must be inspected regularly for leaks, corrosion, scratches, and punctures. If any problem is found IMMEDIATE CORRECTIVE ACTION MUST BE TAKEN. Small repairs and punctures in your liner may be easily repaired using repair kits available at your local dealer. Scratches on your pool wall and frame must be touched up with anti-rust enamel. Wire brush all rust and add a coat of enamel primer followed by a coat of color matching paint. Pool water is full of various caustic chemicals, which will corrode metal parts. If any corrosion is allowed to continue, failure of the pool structure may occur which could result in excessive property damage as well as bodily harm.

The skimmer, return area and below them, are particular areas that must be carefully and regularly inspected. If these areas are wet, and remain wet for any length of time, it usually means there is a small leak. Skimmer/skimmer return gaskets must be replaced when they become defective. Water must not be permitted to continually run down the wall, if neglected, the pool will break. If proper skimmer/skimmer return gasket care is not maintained, your warranty will be void!

IMPORTANT
Be sure to follow all local and state safety regulations when installing any accessory to your pool. Any decks, and all entries, must be carefully monitored for safety and access to pool. Please follow the manufacturer`s guidelines for your safety.

WINTERIZING YOUR POOL

Along with the cool nights of autumn comes the end of the swimming season. During the winter your pool is subject to more stress than in the summer, and any breakage that is caused by incorrect winter procedures is not subject to any warranty with this company.

All of our pools are designed to be left up all winter, but nonetheless are subject to the warranty that was purchased. Continue to chlorinate and filter until the pool is closed down. If you follow our recommendations, you will be able to winterize your pool properly in a few hours.

Properly winterizing your pool will protect it from damages and make it easier for you to reopen it when spring arrives.

The key to fast and easy winterization lies in regular treatment of the water until the start of the cold season, even if you haven't been using the pool.

Routine maintenance becomes easier and less frequent as the water gets cooler. In order to keep the water clean and clear and to prevent the liner from staining, we recommend closing your pool as late as possible, i.e. toward the end of September when the water temperature is about 10°C (50°F).

Waiting until you have finished closing the pool before shutting off the filtration system will prevent hoses still connected from freezing.

Follow the instructions on the following pages or contact your retailer for further information to ensure that you are protecting your pool properly.

CLOSING YOUR POOL FOR WINTER

At the end of the season, you must follow these directions to make your pool ready for the winter. For areas where water freezes make sure to follow these instructions before the water is frozen, otherwise do not touch the frozen water, this may damage the pool.

STEP 1

PRIOR TO CLOSING

Several days prior to closing your pool, test the water for the ph level, total alkalinity, and chlorine. The water balance is important to protect the pool from corrosion or scale build-up during winter shut down.

STEP 2

PERFORM A COMPLETE INSPECTION

FINDING LEAKS

Towards the end of the summer season, check for leaks by verifying if the pool's water level is stable. Draw a line on the liner marking the water level and wait 10 days. If after 10 days the level has dropped, then there is a leak. It is important to seal off any leaks you find. Leaks left unsealed when freezing begins can seriously damage your pool and even cause it to collapse.

Vacuum carefully to remove all leaves and debris.

CHECK THE LINER

Make sure the top of the liner is still attached to the pool wall. Make sure there are no leaks. Repair any liner holes with a vinyl patch: any small punctures in the liner can be easily repaired with underwater repair kits available at your local retailer. Do not remove the liner from the pool, as removal of the liner will void the existing warranty.

CHECK ALL JOINTS AND SCREWS

Make sure all the frame joints are fitting together properly and make sure the pool wall has not shifted from the bottom rail. Ensure all screws and bolts are tight.

CHECK FOR RUST

Periodically inspect the metal parts for any corrosion especially around the skimmer area. If corrosion is found, immediate corrective action must be taken. Wire brush any rust and add a coat of enamel primer followed by a coat of color matching anti-rust enamel paint. Pool structure failure could result in major property damage and bodily harm. Paint any scratches with anti-rust paint.

STEP 3

ADD CLOSING CHEMICALS

To maintain water quality, use a winter kit which contains an algicide and chlorine especially designed for this purpose. When it's time for spring cleaning, this will save you hours of work and reduce the cost of chemicals needed to restore your water quality.

If your pool has a bottom drain, you will have to use pool antifreeze to prevent it from freezing during the winter. Unscrew the hose from the base of the skimmer and attach an extension. Pass the extension over the wall of the pool, making sure it remains well attached. Pour antifreeze into the extension. Leave the valve open so that water can drain from the skimmer.

STEP 4

LOWER THE WATER LEVEL

Lower the water level so as to leave between 6 to 20 inches (15cm to 50cm) below the water return. You may plug the return jet hole at this time. **IMPORTANT**DO NOT PLUG THE SKIMMER DRAIN HOLE (located at the base of the skimmer). Remove all hoses attached to the skimmer and return fittings. Do not let water freeze in the skimmer. Leave the skimmer attached to the pool wall and ensure that the skimmer lid is installed. DO NOT DRAIN ALL THE WATER OUT OF THE POOL.

Depending on your area and if the freezing point is more aggressive, for example 50% is frozen into ice, we strongly suggest to lowering the water to lowest point. Depending on how great the deep freeze is in your area we suggest you consult with your local dealer about procedures on lowering the water level throughout the winter. We also suggest throughout the autumn season to continually check this level before freezing season starts, as it must not reach the skimmer holes at any time during the winter. Remove any snow which may accumulate on the top ledges.

STEP 5

FILTRATION PREPARATION

Disconnect the hoses from the filter. Remove and store the filter, ladder and all other removable parts from around the pool. The filter should be clear of any foreign objects and water should be removed from the filter and pump. See the manufacturer's instructions. Store the pump in a temperature controlled environment (so that it is not damaged by changes in temperature).

STEP 6

WINTER COVER

For the winter cover we suggest to lower the water level to 1 inch (2.5cm) below the water return. In some areas your dealer may ask you to install it differently in order to protect the pool and the cover. Contact your local dealer to verify the correct procedure for your pool.

If using a winter cover, make sure to place a ball underneath so that rainwater falls into the pool. An accumulation of too much water on the cover could place pressure on the pool, causing damage and invalidating the warranty. Depending on how great the deep freeze is in your area we suggest you consult with your local dealer about procedures on leaving the pool cover throughout the winter.

IMPORTANT

Never let more than 30 cm (1') of snow accumulate on the pool wall; the wall is designed to support the lateral pressure of the pool water, not vertical pressure. With spring thaw, if water leaks from the skimmer or return outlet opening, place a tube at the opening so that the water will run off as far away from the basin of the pool as possible. PLEASE NOTE: Do not strike or hit a frozen pool. This would damage it. Do not disturb the pool till spring. If you have left the winter cover on the pool, make sure to remove accumulated snow after heavy snowfalls.

IMPORTANT

Whatever the type of valve or extension hose used, you must follow the technique described in this document to close your pool, otherwise your warranty may be cancelled. Make sure to use antifreeze designed for pools.

An unsealed leak may comprise or cancel the warranty on your pool. Never leave water in any of the filtration system components due to the risk of damage during freezing.

PREPARING YOUR POOL IN SPRING

READ ALL INSTRUCTIONS CAREFULLY

At the end of winter, allow the ice in the pool to thaw completely. When the temperature reaches approximately 10 °C (50 °F), you have to restart your filtration system, since algae and bacterial form more quickly as it gets warmer. Here is how to prepare your pool in a few simple easy steps.

STEP 1

If your pool is equipped with a pool cover, remove the cover and ball. Carefully remove with a hose any rainwater that has accumulated on the cover so it does not fall into your pool. Clean your cover and ball and let them dry. Store them in a dry clean place.

STEP 2

Attach the return inlet and skimmer to the filter. Bring the water level up to the middle of the skimmer. Get your filter working. Clean the bottom of the pool with the vacuum, taking care to place the filter in the "waste/drain" position. This way you will eliminate particles of dirt without disturbing the sand in the filter, and will considerably reduce the need for "backwash rinsing" of the filter.

STEP 3

Now that you have purified the water, you have to test it. It is very important that the pH level of your pool is between 7.6 and 7.8 and the pool's alkaline content is between 80 ppm and 130 ppm. If you are unable to attain these levels, please contact your retailer who will gladly do these tests for you.

STEP 4

When the pH and alkaline levels are ideal, apply a shock-treatment or chlorinate your water.
Let it filter for 24 hours and again verify both the pH and free chlorine levels.
NOTE: Add chemical products to your pool after sunset, as sunlight rapidly destroys chlorine.

STEP 5

Let it filter for several days until the water is clear and the pH and free chlorine levels have stabilized. Add a conditioner/stabilizer by carefully following the manufacturer's instructions. This will stop the chlorine from evaporating quickly in sunlight. Add the quantity of algicide required to prevent algae.

STEP 6

You may now begin regular maintenance of your pool.
Don't forget to obtain a new set of solutions for your water analysis kit every spring. The old solutions may give false results.

STEP 7

Make sure that the skimmer (screws and adapter) is properly in place and tighten the water return fittings to prevent leakage and premature rusting of the pool wall or the lower part of the bottom rail.

IMPORTANT

Do not drain your pool to clean the water unless absolutely necessary (the water is recyclable). If you do empty your pool, don't leave it empty for too long or expose it to direct sunlight, as the liner may shrink.

IF YOU FOLLOW THESE TIPS AND ASK YOUR DEALER FOR ANY OTHER ADVICE YOU MAY NEED, YOU WILL HAVE ALL THE INFORMATION NECESSARY TO GET YOUR POOL OPERATING AGAIN.

WARRANTY REGISTRATION

INSCRIPTION GARANTIE

For your protection as a pool owner, it is important for Wilbar to keep a record of your purchase. Please place the enclosed Safety Labels on your pool per our directions. This will ensure the validity of your warranty, and the use of safety labels may protect you against possible legal liability in case of serious injury.

Please take a few moments to fill out the form below and mail, fax, or scan and send via email. Be sure to retain a copy of the completed form for your records, in case you require warrantied repairs or need another set of free Pool Safety Labels.

Pour votre protection en tant que propriétaire de piscine, il est important que Wilbar conserve une trace de votre achat. Veuillez placer les étiquettes de sécurité ci-jointes sur votre piscine conformément à nos instructions. Cela garantira la validité de votre garantie et l'utilisation d'étiquettes de sécurité pourrait vous protéger contre une éventuelle responsabilité légale en cas de blessure grave.

Veuillez prendre quelques instants pour remplir le formulaire ci-dessous et nous l'envoyer par courrier, fax ou numérisation et l'envoyer par courrier électronique. Assurez-vous de conserver et de conserver une copie du formulaire rempli pour vos dossiers, au cas où vous auriez besoin de réparations sous garantie ou si vous avez besoin d'un autre jeu d'étiquettes de sécurité pour piscine gratuites

Factory Registered Warranty Form. Liner warranty supplied by dealer.
I have placed all three (3) Pool Safety Labels on my pool in the locations suggested in your instructions.
Please register the warranty at mypoolwarranty.com.

Formulaire de garantie enregistré. Garantie pour la toile est fourni par le détaillant.
J'ai placé les trois (3) étiquettes de sécurité sur ma piscine dans les endroit que vous avez suggéré dans vos instructions. S'il vous plaît inscrivez-vous la garantie au mypoolwarranty.com

Name/Nom: _____

Address/Adresse: _____

City/Ville: _____ State/Prov.: _____ Zip/C.P.: _____

Pool dealer/Détaillant: _____

Model purchased/Modèle de piscine: _____

Date of Purchase/Date de l'achat: _____

Mail to/*Envoyer par la poste:*

Wilbar Group
50 Cabot Court
Hauppauge, NY 11788
ATTN:
WARRANTY/GARANTIE

Or fax to/*Par télécopie*:

(631) 951-9170

Or email/*Courriel*:

info@mypoolwarranty.com

P/N 95-0099