ultrasite™

A PLAYCORE Company

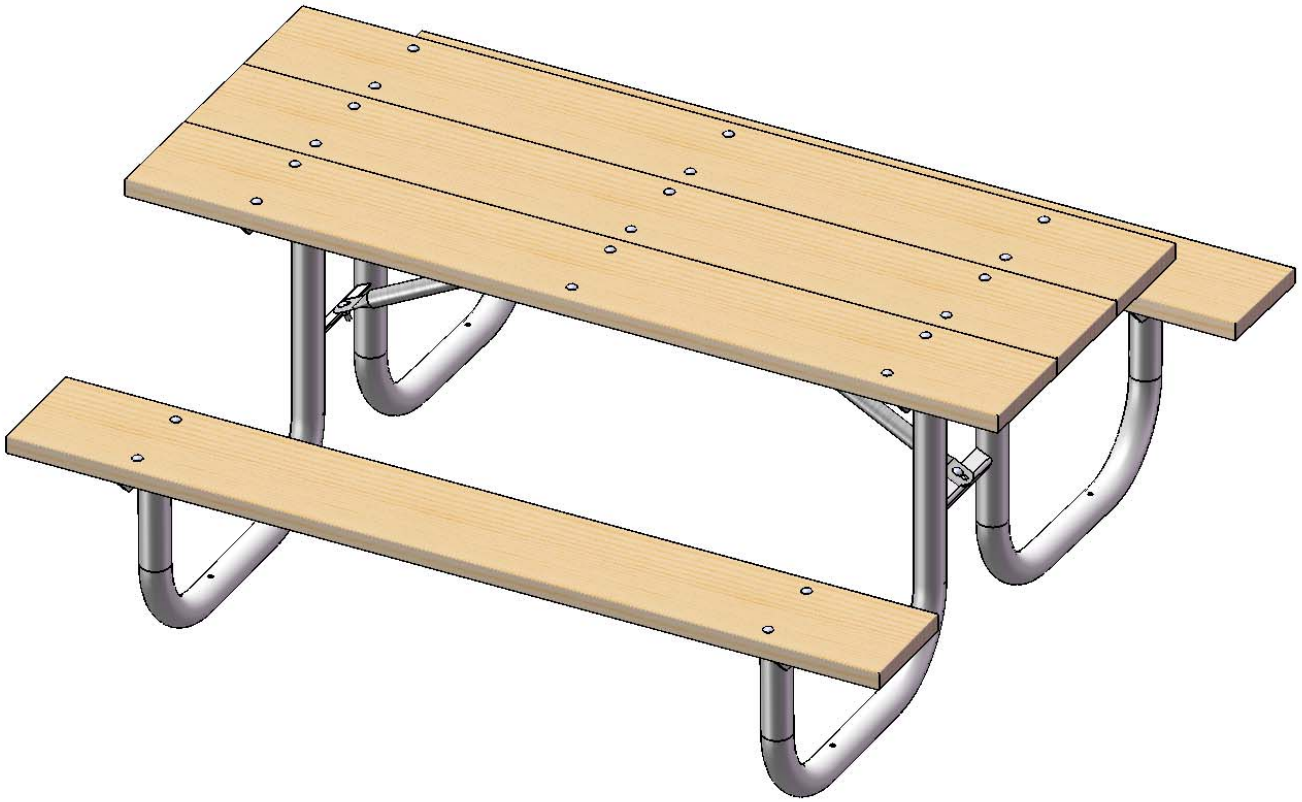

Model # 238-T6

1675 Locust Street
Red Bud, IL 62278
Phone: 618-282-8200
Fax: 618-282-8202

WARRANTY & TERMS

WARRANTY: 5 Year Limited Warranty on Thermoplastic coated elements. Ultra Play guarantees all items for one full year to be free of defects in workmanship or materials when installed and maintained properly. We agree to repair or replace, any items determined to be defective. Items specifically not covered by this warranty include vandalism, man made or natural disasters, lack of maintenance, normal weathering or wear and tear due to public abuse.

Damages or loss in transit is the responsibility of the carrier, whether visible or concealed. It is the responsibility of the recipient to assure that the order is received complete. Before signing the delivery receipt, inspect the shipment immediately and completely. Note any damages or shortages on the bill of lading. Damage reports must be filed within 10 days. Ultra Play is NOT responsible for damages or loss in transit. Title to all goods passes to the customer at the time of shipment. Ultra Play will assist in filing claims if the freight arrangements were made by Ultra Play at your request.

CANCELLATIONS AND RETURNS: Cancellations are only accepted with approval of Ultra Play. No merchandise shall be returned without a Return Goods Authorization number which is issued by customer service. Any authorized merchandise must be carefully packed and received in saleable condition. A restocking charge of up to 25% will be applied to all returned goods when the error is not the fault of Ultra Play. All returns must be shipped freight prepaid.

SAFETY WARNINGS & EQUIPMENT INSPECTION

- Owners and installers please note these safety warnings and make use of this checklist on a regular basis.
- Follow installation instructions when erecting equipment.
- Ground surfaces around equipment should be restored as needed. Concrete footings should never be exposed. Surface depth should comply with ASTM and CPSC specifications.
- Check for and repair damage caused by wear or vandalism, a major factor in injury causing situations.
- All protruding bolts should be covered or cut off and finished smooth. Sharp edges on pipes should be capped or removed. Check for bent, broken, or severly worn pipe, and replace.
- All equipment should be free of rust and repainted whenever necessary to deter rusting.
- We provide our customers with layout sheets and installation instructions. Please keep on file the specifications sheet that contains the listing of every part used.
- Never add components not intended for use with this product.
- Regular maintenance is necessary in this and all park and recreational equipment to insure the safety of the user.
- Note: Proper maintenance of equipment requires regular tightening of all bolts, nuts, and setscrews.
- Note: Regular checking of all parts, castings, etc. should be made. If a part is broken or worn, it shoud be replaced immediatly.
- Check to be sure all fittings are tight and that bars and pipes do not move.
- Replace all worn S-hooks. S-hooks must be completely closed. Failure to close S-hooks can result in serious injury to the user. NEVER reuse S-hooks.
- Test for free movement of swing hanger and other moving attached parts.
- Check for worn chains and replace them.
- A soft resilient surface should be placed under all swings extending at least twice the height of the top rail both front and back.

HARDWARE

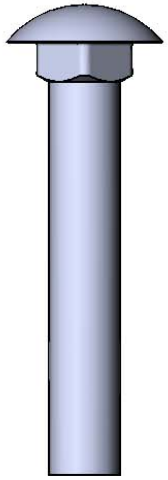

3/8" x 2-1/4"
Carriage Bolt

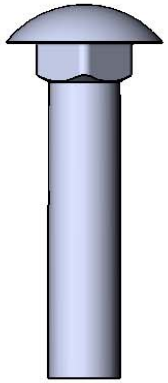

3/8" x 1-3/4"
Carriage Bolt

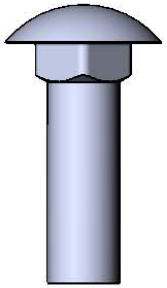

3/8" x 1-1/4"
Carriage Bolt

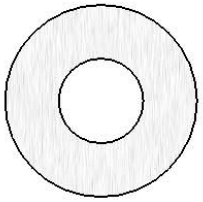

3/8" Washer

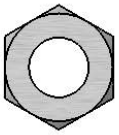

3/8" Hex Nut

TOOLS REQUIRED

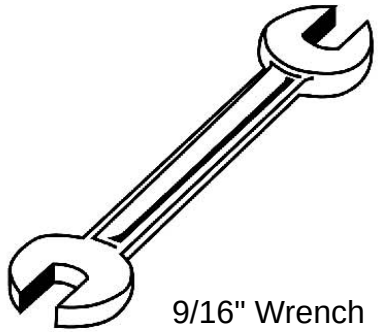

9/16" Wrench

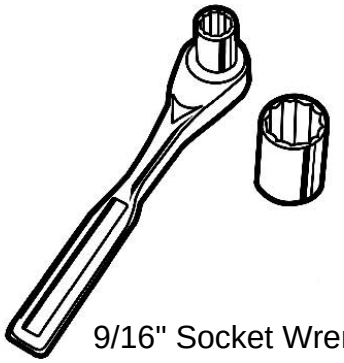

9/16" Socket Wrench

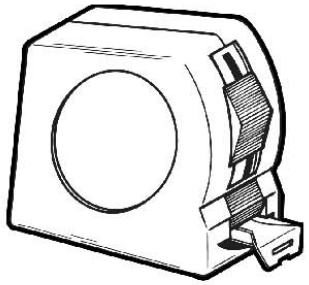

Tape Measure

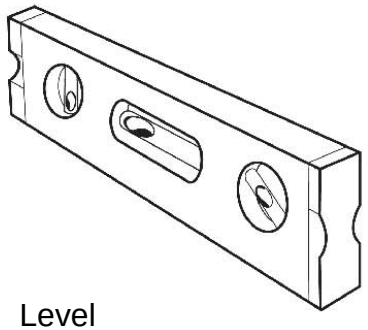

Level

238-T6
6’ PORTABLE PICNIC TABLE WALK-THROUGH DESIGN

Top & Seats: No. 1 Southern Yellow Pine stained with a redwood stain wood preservative.

Frame: 2-3/8” O.D. x 12 gauge pre-galvanized structural steel tubing. One 1 1/2" x 3/4" x 1/8" center channel shall be mechanically attached to the bottom side of tabletop to prevent warping of wood and to attach cross braces, thus providing over all strength and rigidity. Cross braces 1 5/16” O.D. x 15 gauge pre-galvanized structural steel tubing. Brace attachment points 1-1/2”x1-1/2”x3/16” steel angle. All tabletop and seat mounting brackets shall be precision punched and fabricated from 2" x 2" x 7 gauge formed angle. Legs are bent over a mandrel through the bend radius producing a wrinkle free bend. All electrically MIG welded.

Frame Coating: Electrostatic powder coated application oven cured or hot dipped galvanized.

Hardware: Hardware shall be hot-dipped galvanized.

Dimensions: 6’ portable picnic table walk-through design. Top is 27-3/4” wide x 72” long and is 30” high. Seats are 9-1/4” wide x 72” long and 18” high. Outside to outside dimension is 65” x 72”.

COMPONENTS

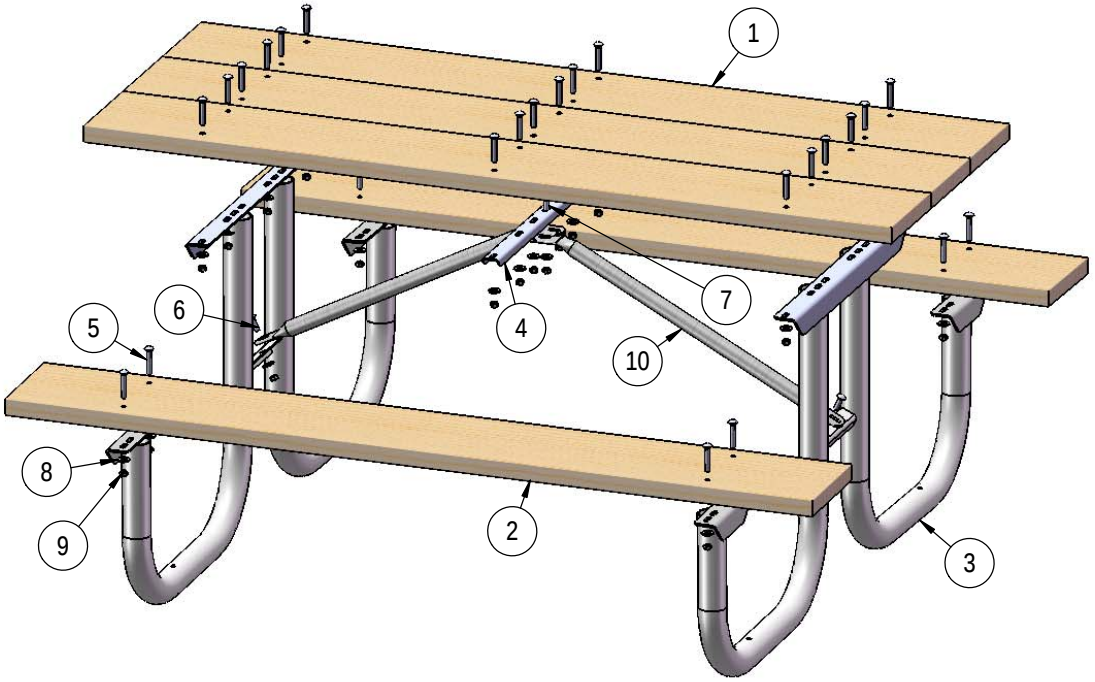

ITEM NO.	PartNo	DESCRIPTION	QTY
1	PT72-2x10-T, RST72-2x10-T, or U72-2x10-T	2 x 10 Pressure Treated Table Plank (6'), 2 x 10 Redwood Stained Table Plank (6'), or 2 x 10 Untreated Table Plank (6')	3
2	PT72-2x10-S, RST72-2x10-S, or U72-2x10-S	2 x 10 Pressure Treated Seat Plank (6'), 2 x 10 Redwood Stained Seat Plank (6'), or 2 x 10 Untreated Seat Plank (6')	2
3	P-W238 or G-W238	238 wood frame	2
4	01-04-0027	center c channel	1
5	33-06-0016	3/8" x 2-1/4" Carriage Bolt (Zinc)	26
6	33-06-0032	3/8" x 1-1/4" Carrige Bolt (Zinc)	2
7	33-06-0005	3/8" x 1 3/4" Carriage Bolt (Zinc)	1
8	33-02-0002	3/8" Zinc Plated Washer	29
9	33-01-0002	3/8" Hex Nut (Zinc)	29
10	01-04-0165	6' Wood Brace	2

Optional Surface Mount Hardware:
5/16" x 5" Concrete Expansion Anchor Bolts
(Not Included)

STEP 1

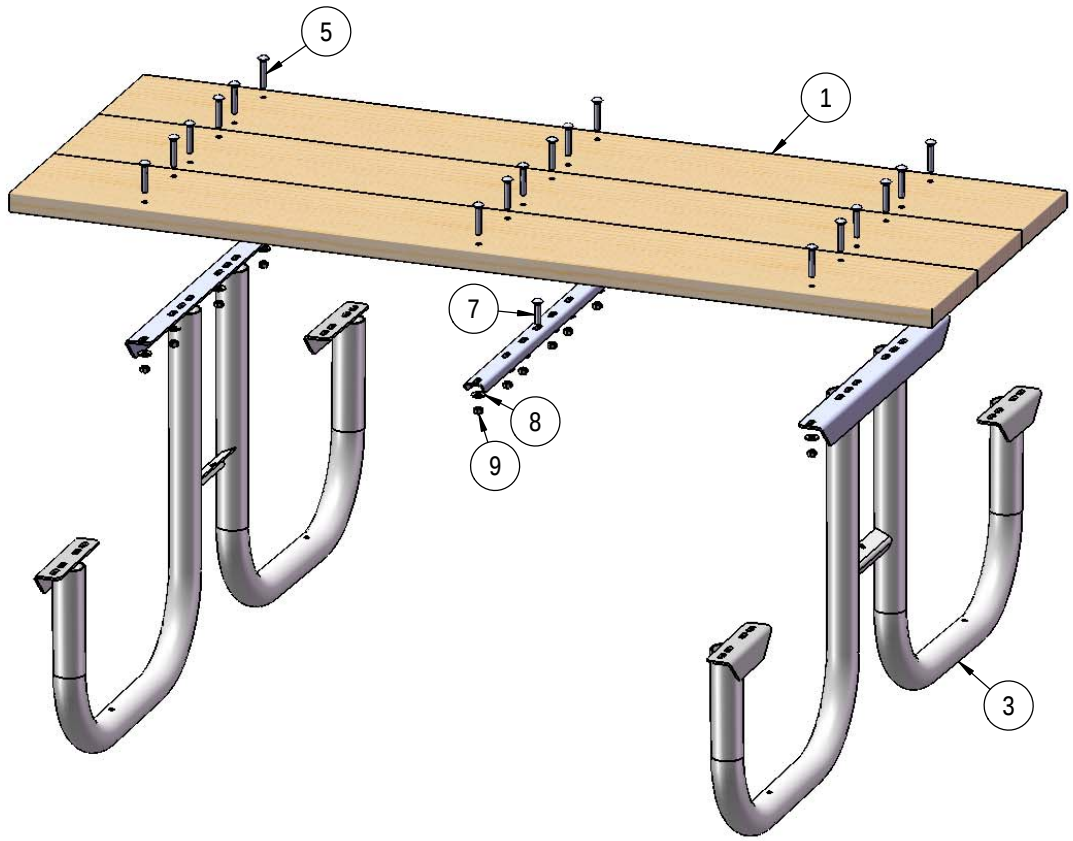

Attach the Wood Planks and the Center C-Channel to the 238 Frames as shown using specified hardware. Note that the center bolt is between the C-Channel and the table plank.

STEP 2

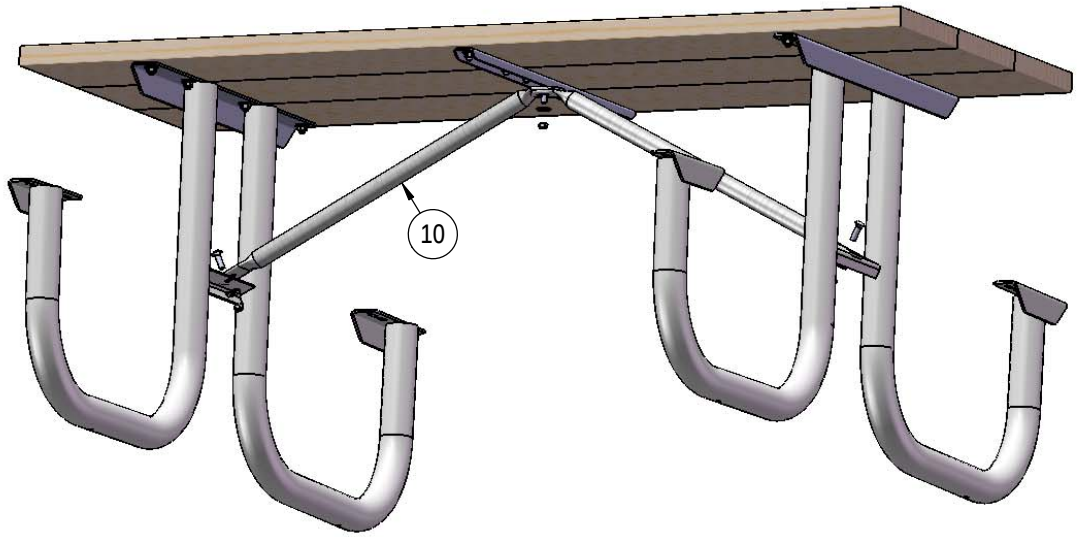

Attach the Wood Braces to the C-Channel and the 238 Frames as shown using specified hardware.

STEP 3

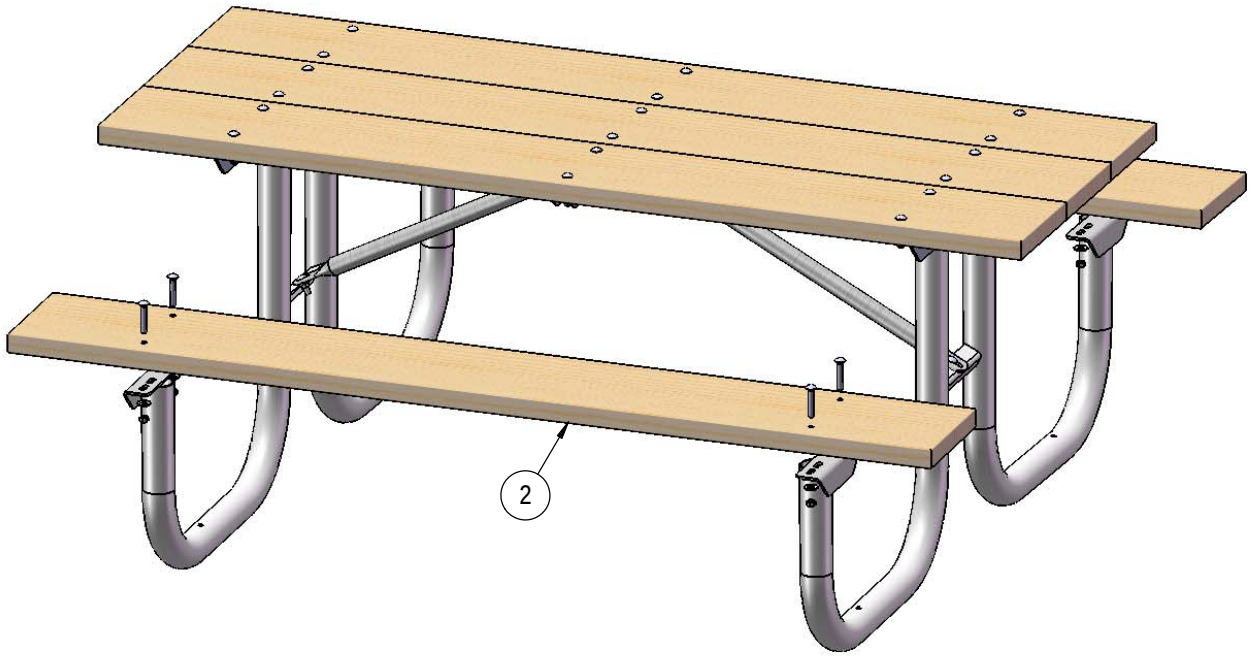

Attach the Wood Seat to the 238 Frames as shown using specified hardware.
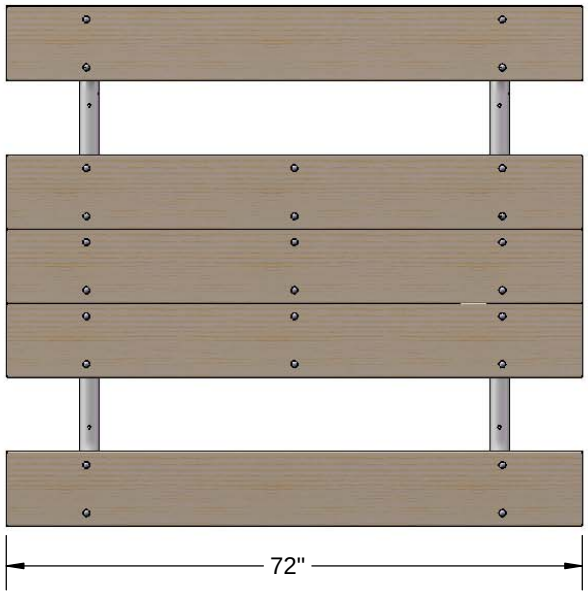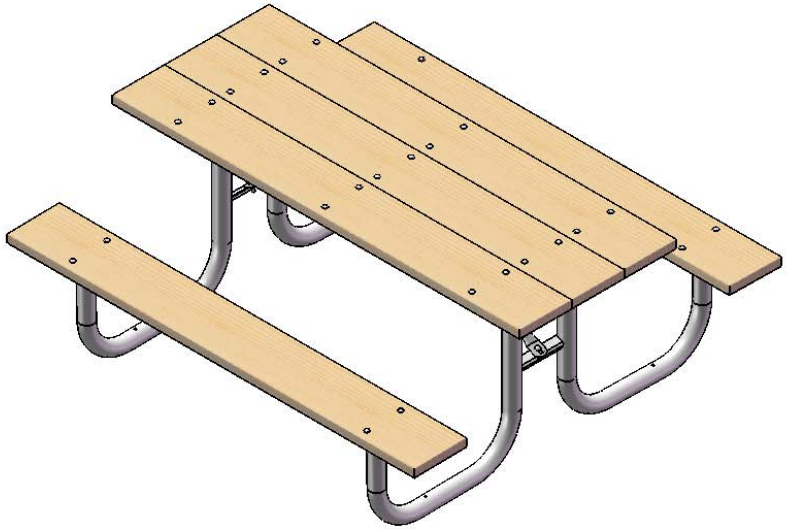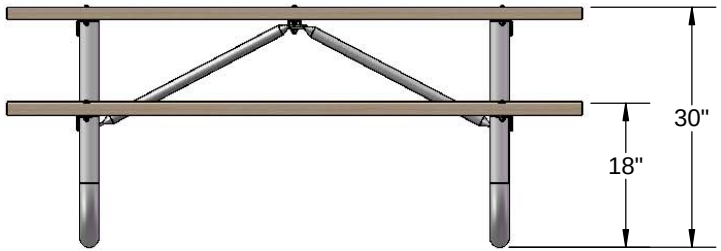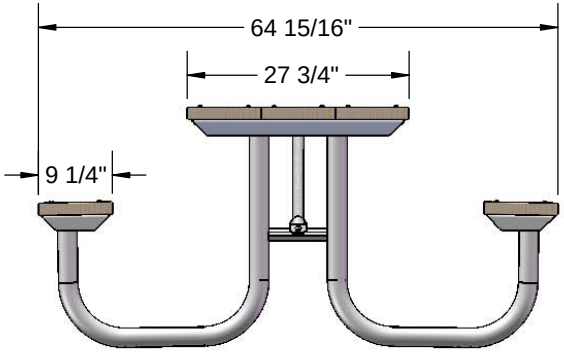
OVERALL DIMENSIONS